“Revolution 10”
Modular Concept to Reality



Thanks to Robin Barnes

Introduction

- Background
- What is “Revolution”?
- A Solution
- How do we build it?

Steam in the UK

- Mainline Specials
  - The loco is important
- NR Tourist operations
  - The route is important
- Preserved Lines
  - Locos important at Galas
  - Steam is important for normal service
- All services hauled by original locos
  - Aging of the loco fleet (e.g. Black Five 65+)

Mid-Hants News –Spring 2018

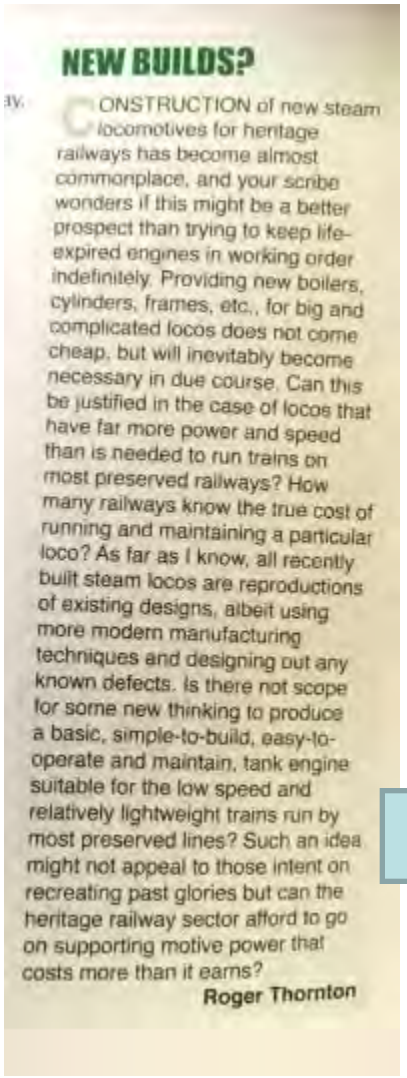

NEW BUILDS?

CONSTRUCTION of new steam locomotives for heritage railways has become almost commonplace, and your scribe wonders if this might be a better prospect than trying to keep life-expired engines in working order indefinitely. Providing new boilers, cylinders, frames, etc., for big and complicated locos does not come cheap, but will inevitably become necessary in due course. Can this be justified in the case of locos that have far more power and speed than is needed to run trains on most preserved railways? How many railways know the true cost of running and maintaining a particular loco? As far as I know, all recently built steam locos are reproductions of existing designs, albeit using more modern manufacturing techniques and designing out any known defects. Is there not scope for some new thinking to produce a basic, simple-to-build, easy-to-operate and maintain, tank engine suitable for the low speed and relatively lightweight trains run by most preserved lines? Such an idea might not appeal to those intent on recreating past glories but can the heritage railway sector afford to go on supporting motive power that costs more than it earns?

Roger Thornton

Is there not scope for some new thinking to produce a basic, simple-to-build, easy-to-operate and maintain, tank engine suitable for the low speed and relatively lightweight trains run by most preserved lines? Such an idea might not appeal to those intent on recreating past glories but can the heritage railway sector afford to go on supporting motive power that costs more than it earns?

What is “Revolution”

- Original concept first proposed in 2011
- Modular locomotive design
  - Standard basic locomotive
  - “Dressed Up” to customer needs
  - Power Class 3 to 5
  - “Bolt On” extremities
  - Tender or tank
- Preserved Lines
- Secondary tourist routes

The Solution

- A New Build Design
- Stephensonian layout
  - It must go “chuff”
  - It must have “interesting bits” on the outside
- Embody best practice
- Embrace modern materials, parts and manufacturing.
- Simplicity, reliability, low maintenance

The “Revolution” Concept

- A basic 2-6-x chassis comprising:
  - Boiler
  - Cylinders + motion
  - Wheels and running gear
- Specification can be altered by:
  - Cylinder bore
  - Ballasting
  - Draughting
- Adaptable to many configurations
- Design for alternative fuels

Basic Engine Unit

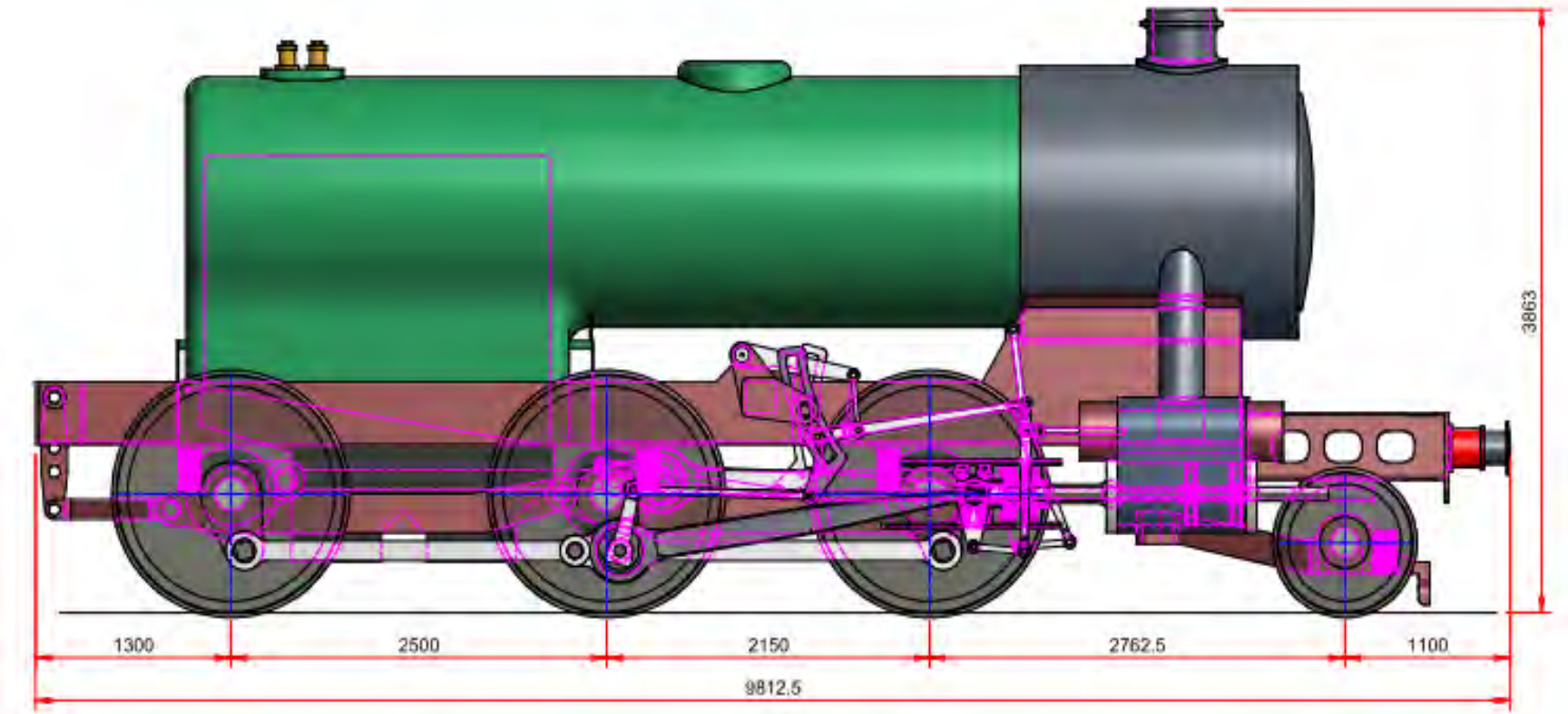

Tender Variations



Base Engine

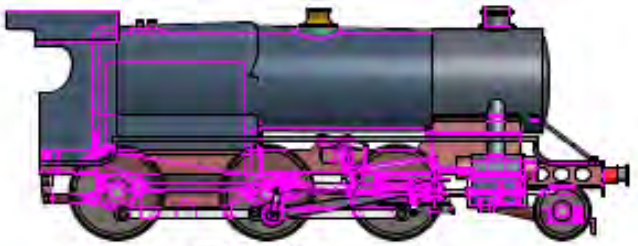

GWR 43XX Style

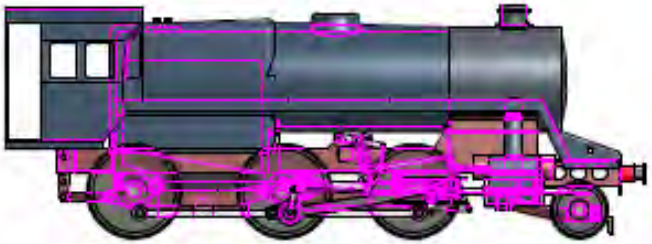

BR Standard 4 Style

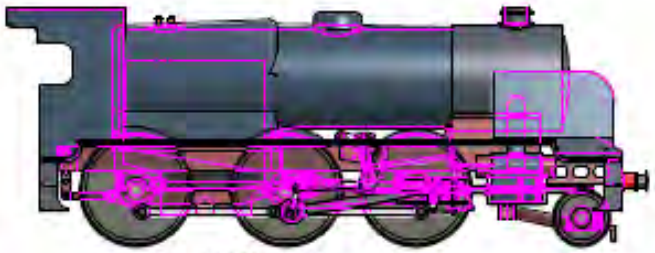

SR 'U' Class Style

Revolution 2-8-0 Tender Locomotive

All members of the Big Four and many pre-grouping companies used 2-6-0s, in addition to the BR Standard designs. Examples not shown here could include:
LBSCR K Class
LNER K1, K3, K4 etc
LMS Stanier 5MT
LMS Ivatt 4MT
SR N Class

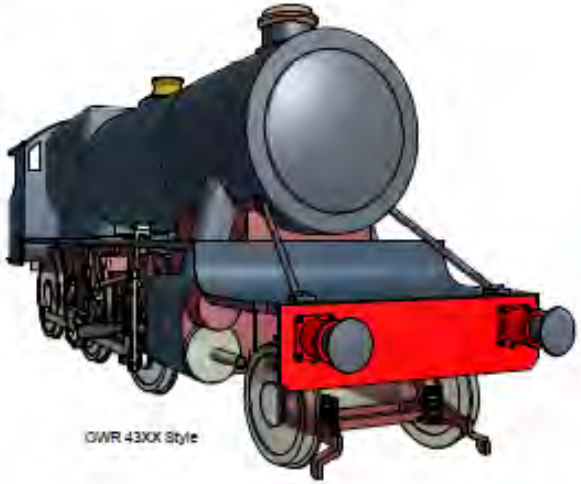

GWR 43XX Style

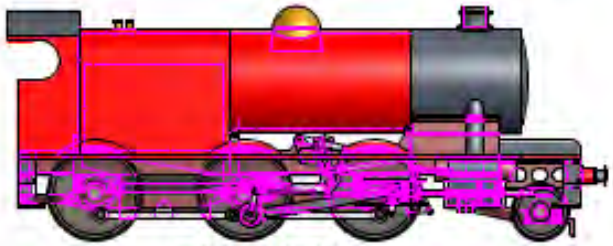

James the Red Engine Style

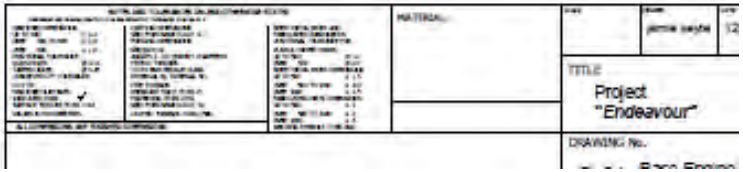

TITLE
Project
"Endeavour"

DRAWING No.

Tank Variations

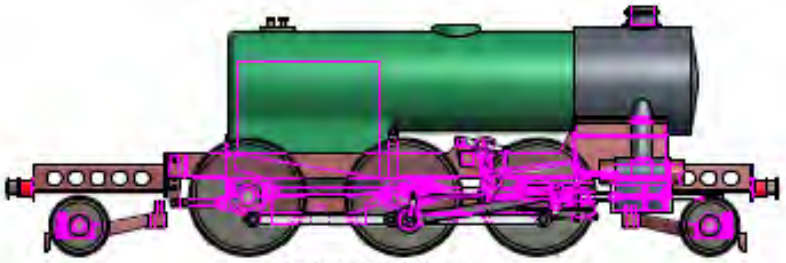

Revolution 6 - Basic Engine

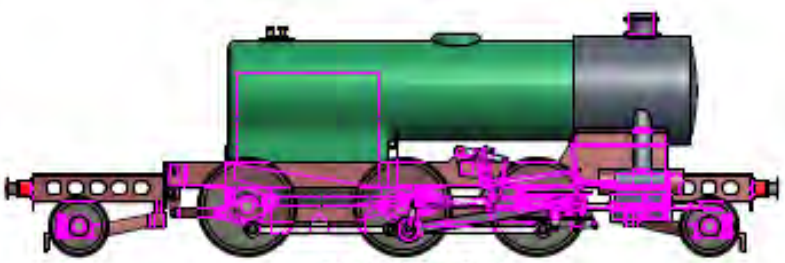

Revolution 5 - Basic Engine

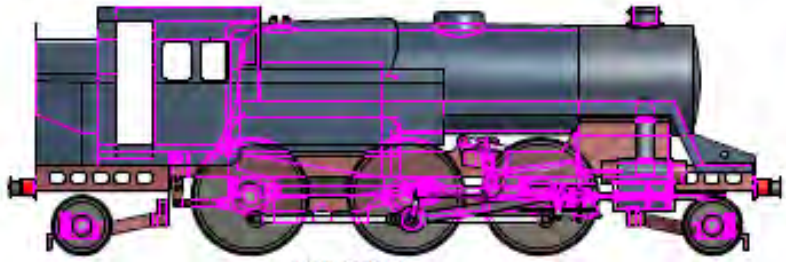

BR Standard Style

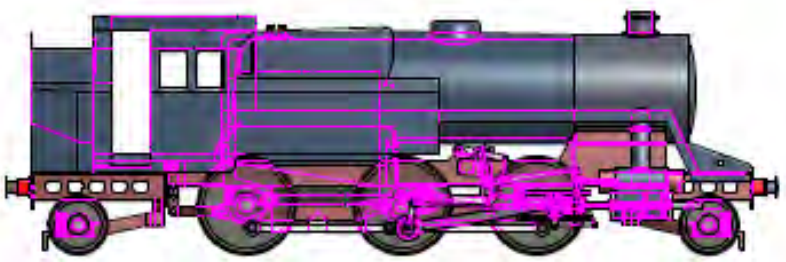

BR Standard Style

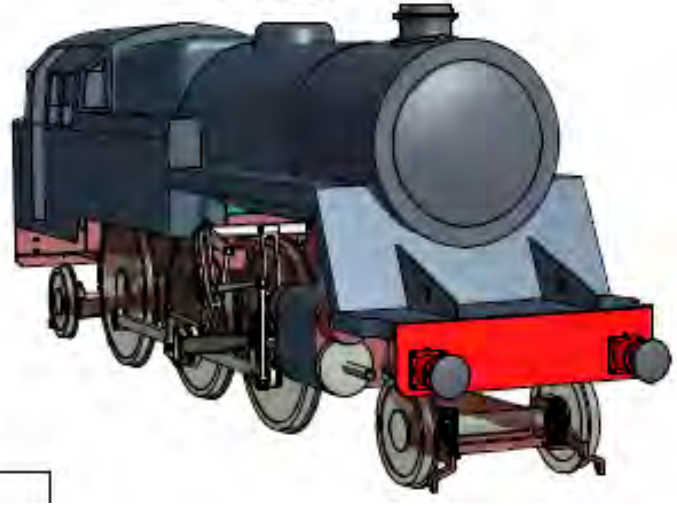

Revolution 2-6-2T / 2-6-4T Tank Locomotive

All members of the Big Four and many pre-grouping companies used 2-6-2Ts and 2-6-4Ts, in addition to the BR Standard designs. For extended range a bogie can be substituted under the trailing truck under longer frames. Examples not shown here could include:
SE&CR / SR "River"
LNER V1
LMS Stanier 4MT
GWR Prairies

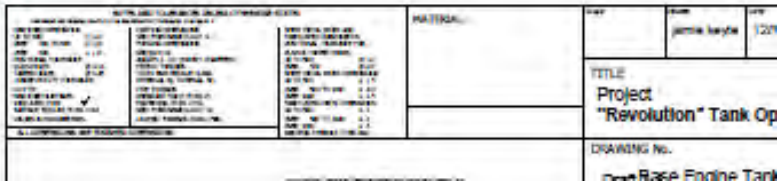

TITLE
Project
"Revolution" Tank Op

DRAWING No.
Base Engine Tank

Keeping the Cost Down

- Simple Design.
- Off the shelf components.
- Only design the basic engine
- Amortise design costs over fleet.
- High level of standardisation
- Off the shelf spares
  - High availability
- Reduced labour costs – operation, maintenance and repair.

BUT……

- Design done on a professional basis.
  - Realistic timescale, realistic salaries!
- Big engines cost a lot of money.
  - No one has the cash!
- No interest (yet) from the preservation movement.

SO….

- Make a little one instead!

“Revolution 10”

- A miniature version of “Revolution”
- Embodies the principle features
- Proof of concept
  - (within reason!)
- Demonstrator
- Development Testbed

What Scale?

- A balance between function and resources

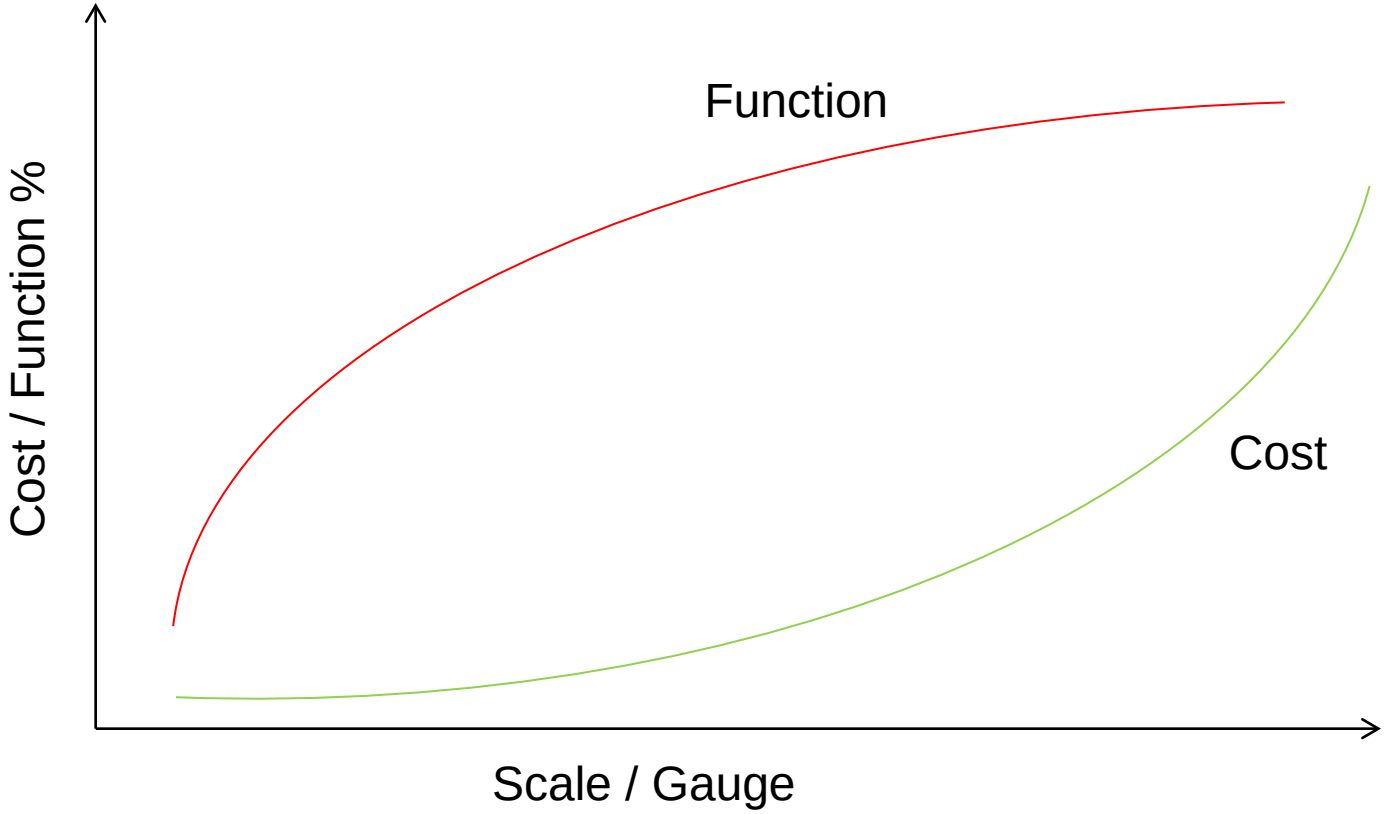

10 ¼” Gauge

- 1/5 Scale outline
  - Not scale: Small size
- Good balance between functionality and cost (5 figures).
- Big enough to instrument and test.
- Small enough to modify and develop
- Try new ideas without excessive risk or cost
- Transportable by trailer
- Good existing skills base

Revolution 10 - Features

- NOT producing the Ultimate Steam Loco!
- Making the Stephensonian layout as good as it could be.
- Principle features:
  - A novel boiler layout
  - A novel suspension system

The Boiler

- Why deviate from the norm?
  - Efficiency as a heat exchanger
  - Stays
  - Circulation

Boiler: the Heat Exchanger

Heating Fluid
Combustion Gas

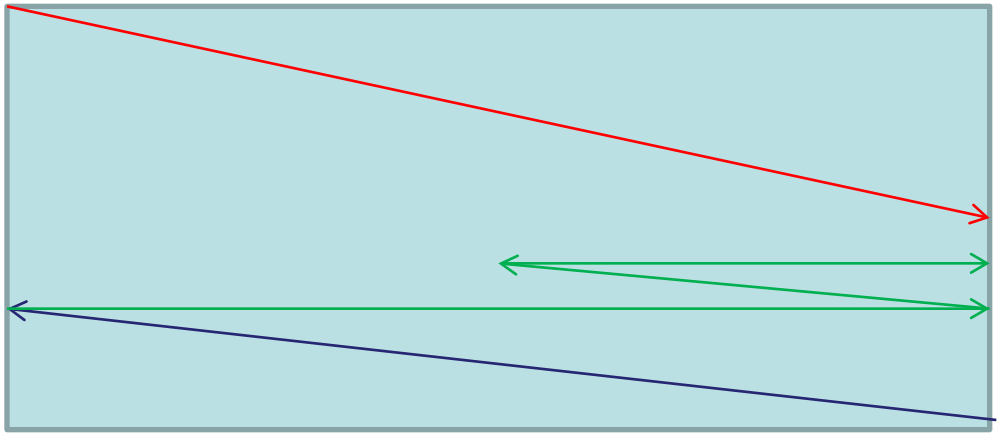

Heated Fluid
Feed Water

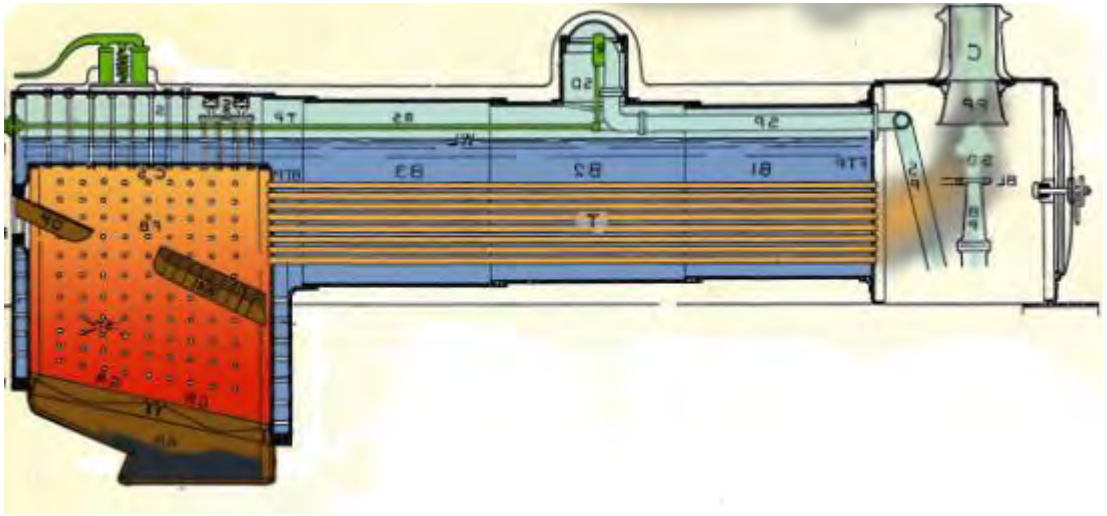

Stays

- Expensive to make
- Potential weakness



Circulation

- Traditional boiler

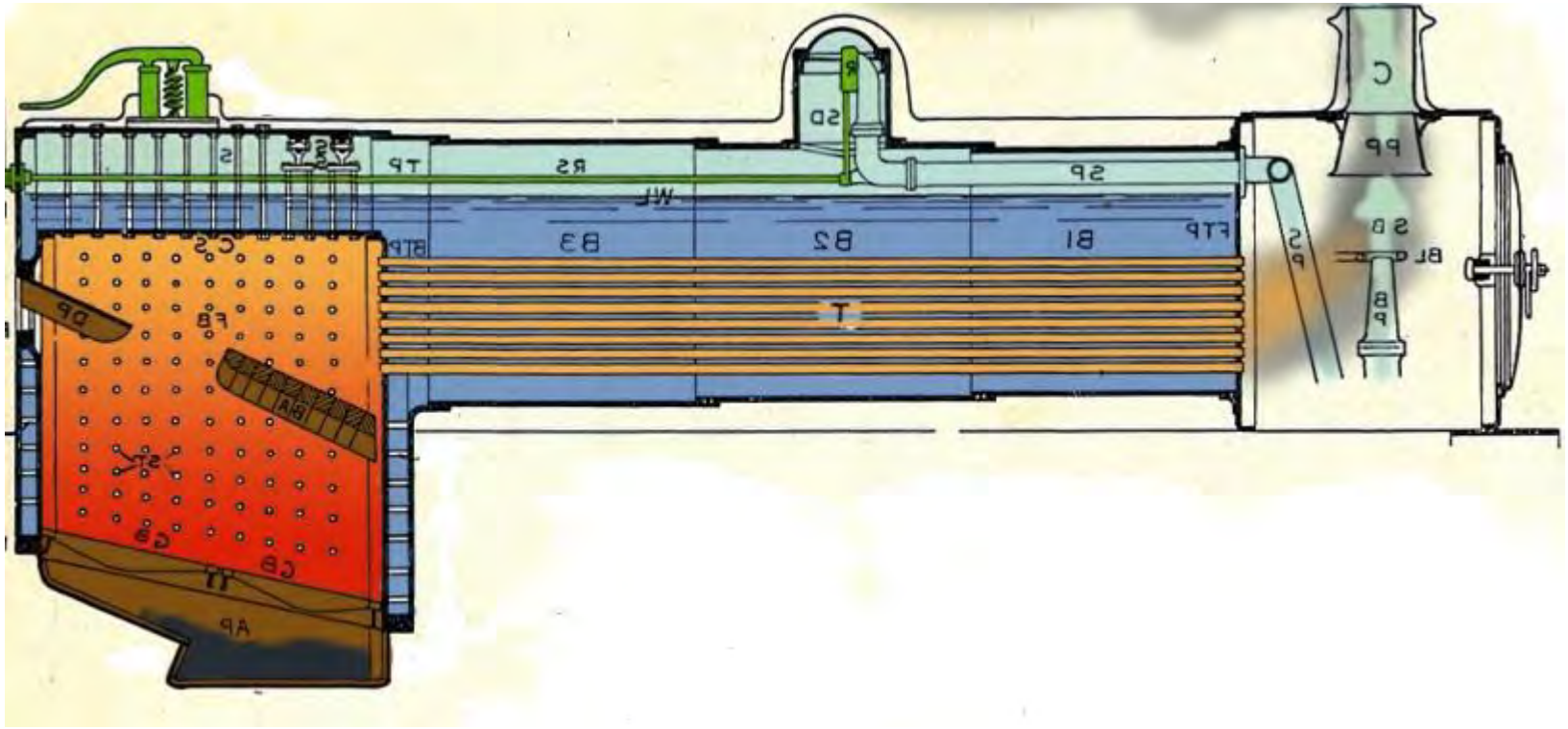

John Nicholson - Thermic Syphon

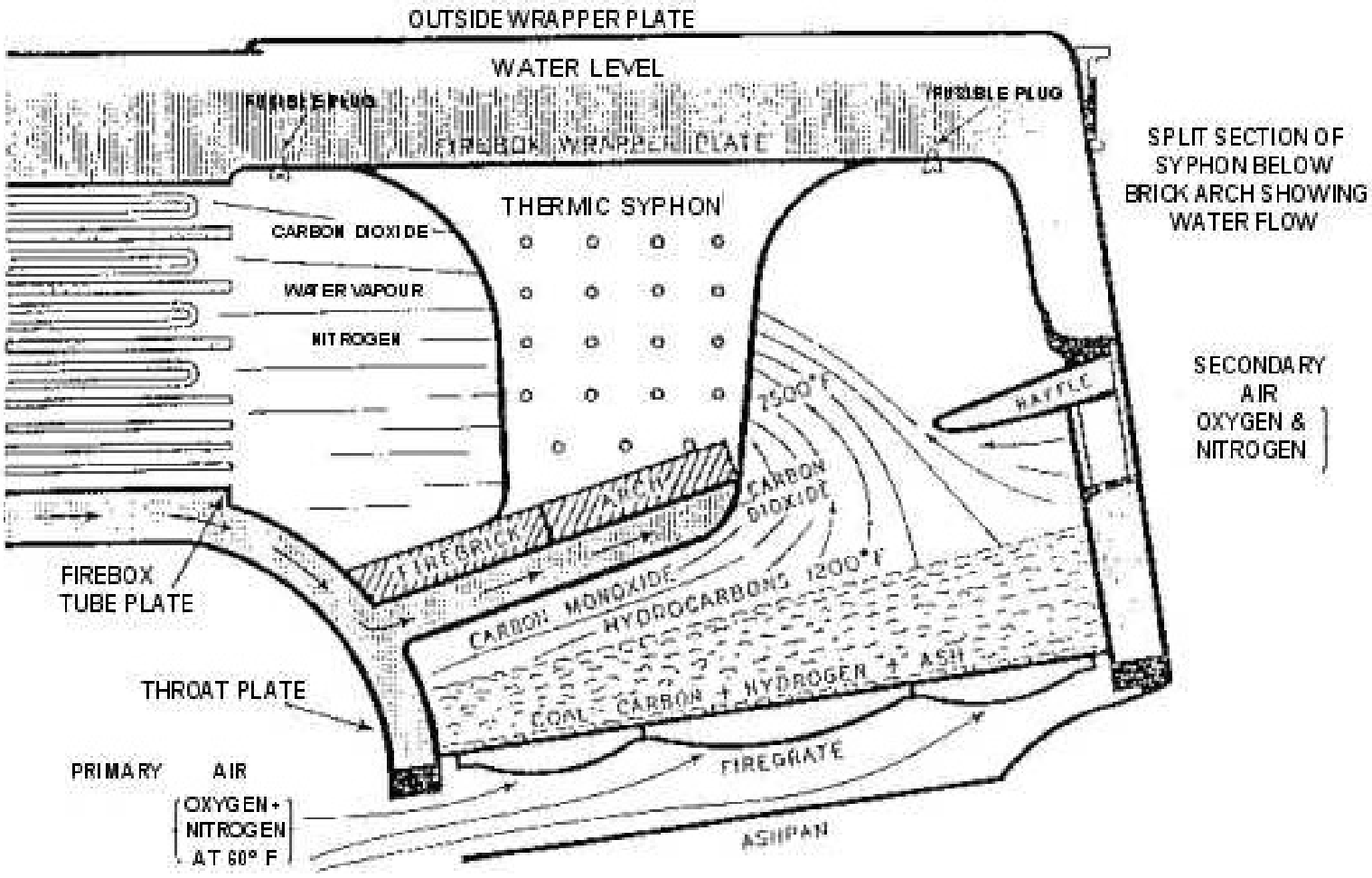

Bulleid’s Leader

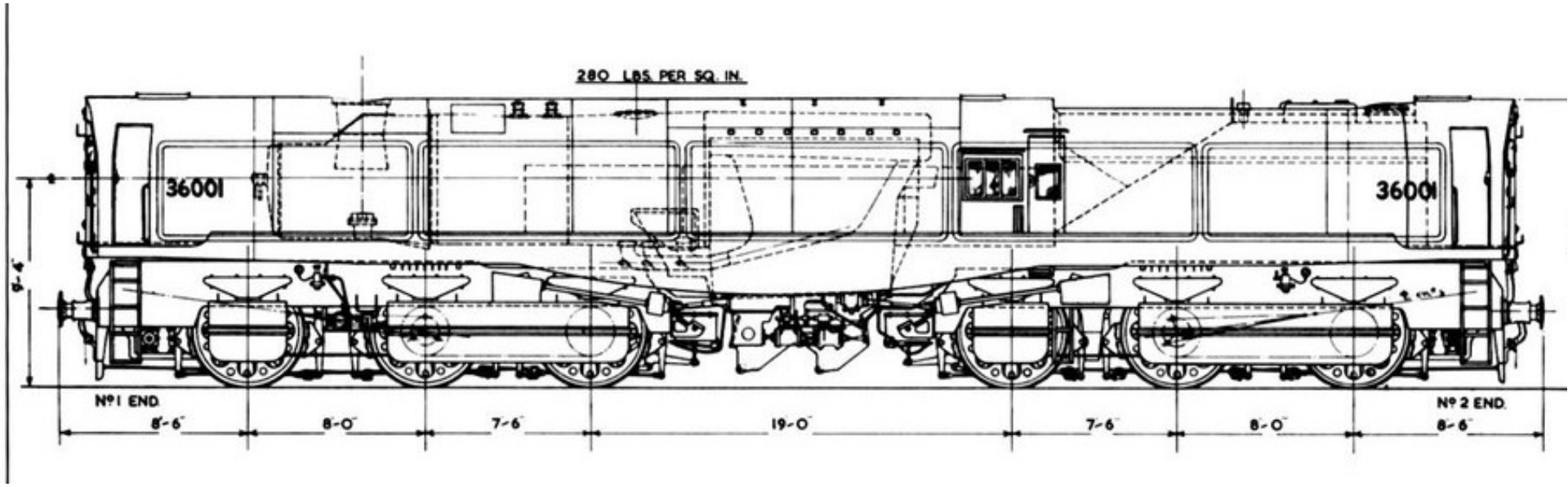

Bulleid's Leader



Brotan-Deffner

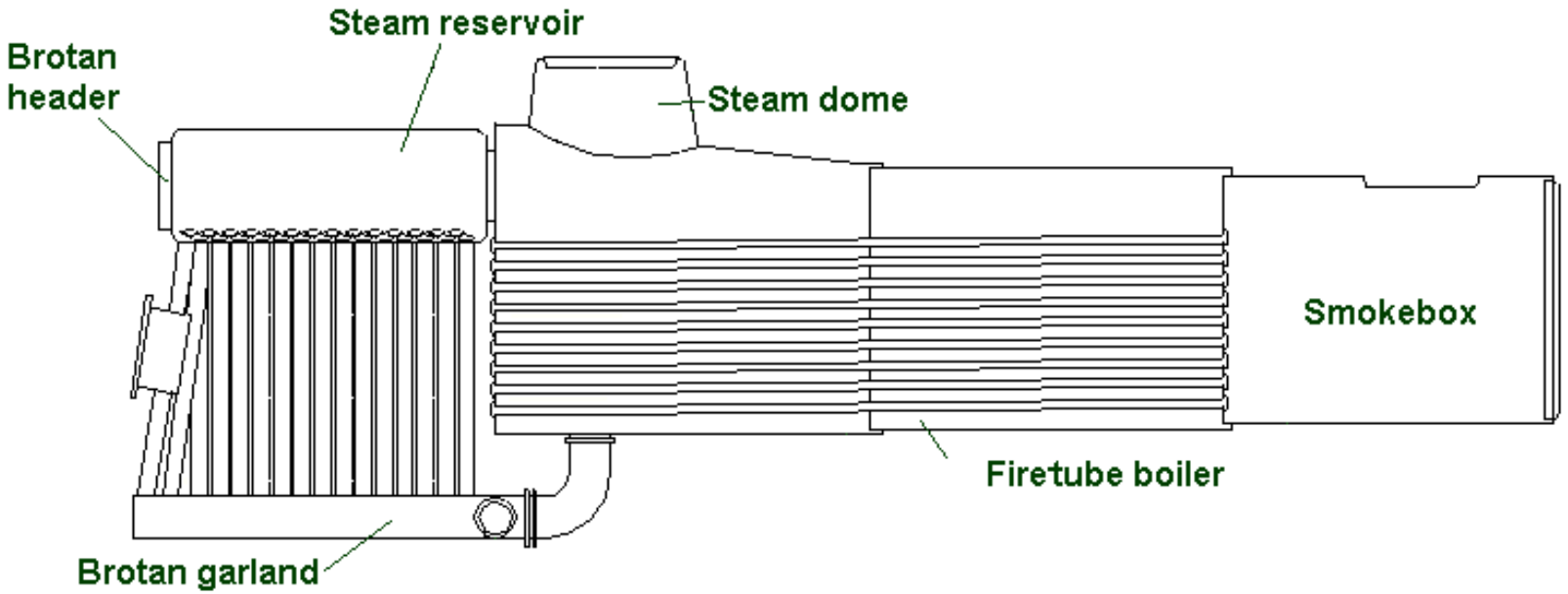

Brotan-Deffner



Brotan-Deffner

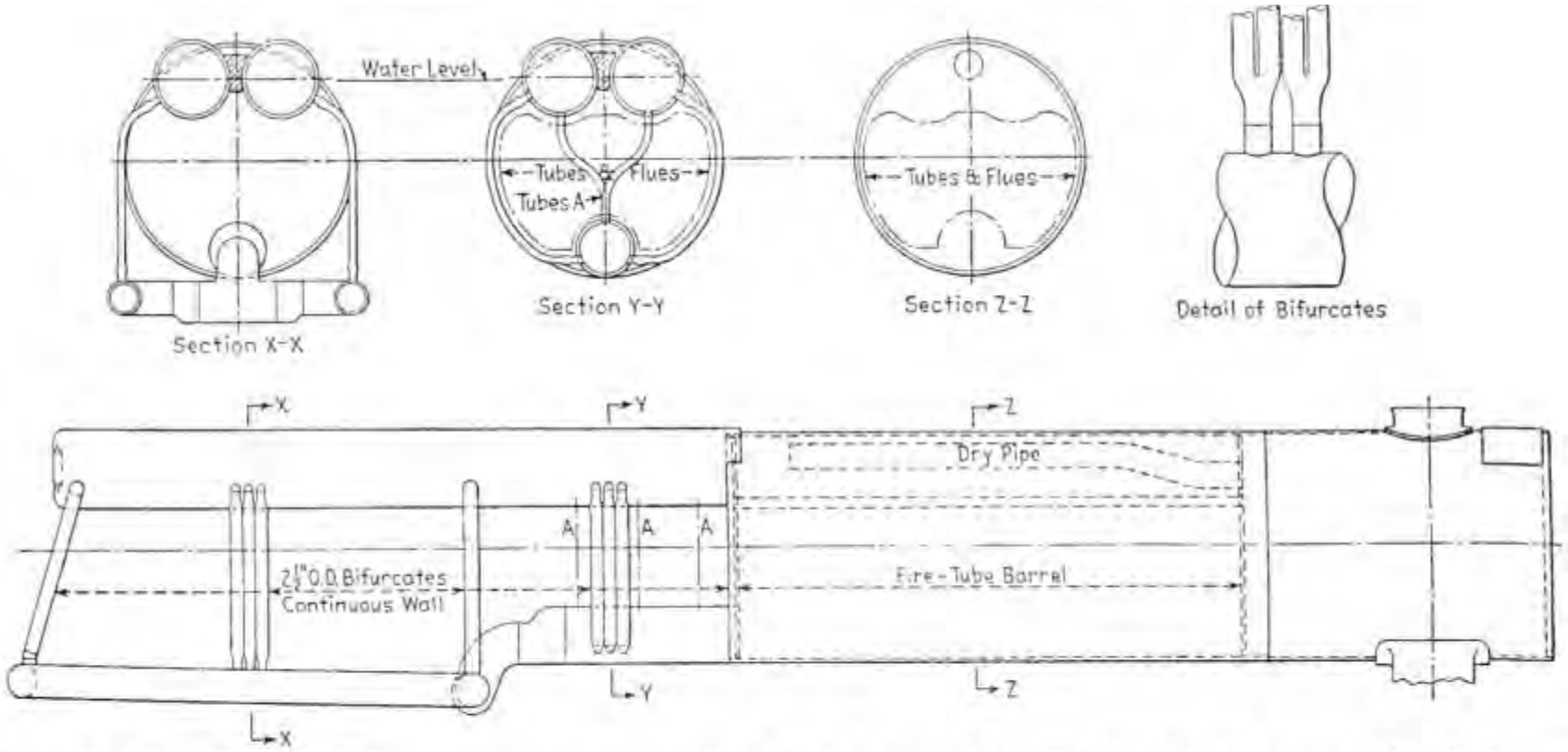

Fig. 25. Steam Locomotive Research Institute, U.S.A.: proposal for boiler with water-tube firebox, working pressure 40.8 atm.) 600 lb/in², 1948. Boilers of similar type were included in André Chapelon's studies for locomotives with triple expansion drive.

Brotan-Deffner

- Over 1000 in Hungary
- Eliminates stays
- Good circulation
- However:
- Loss of mechanical Strength
  - Frame Stiffening

“Revolution” Boiler

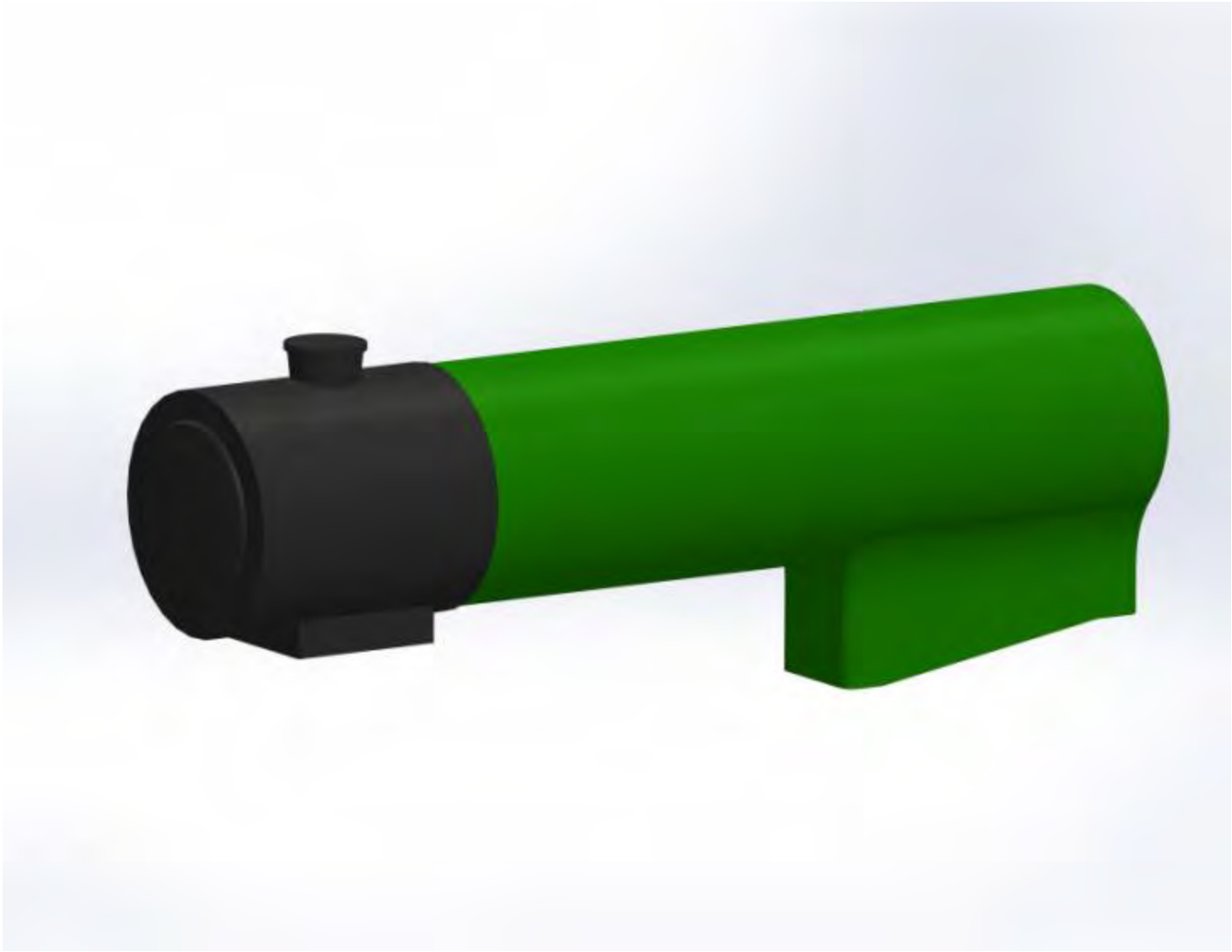

“Revolution” Boiler

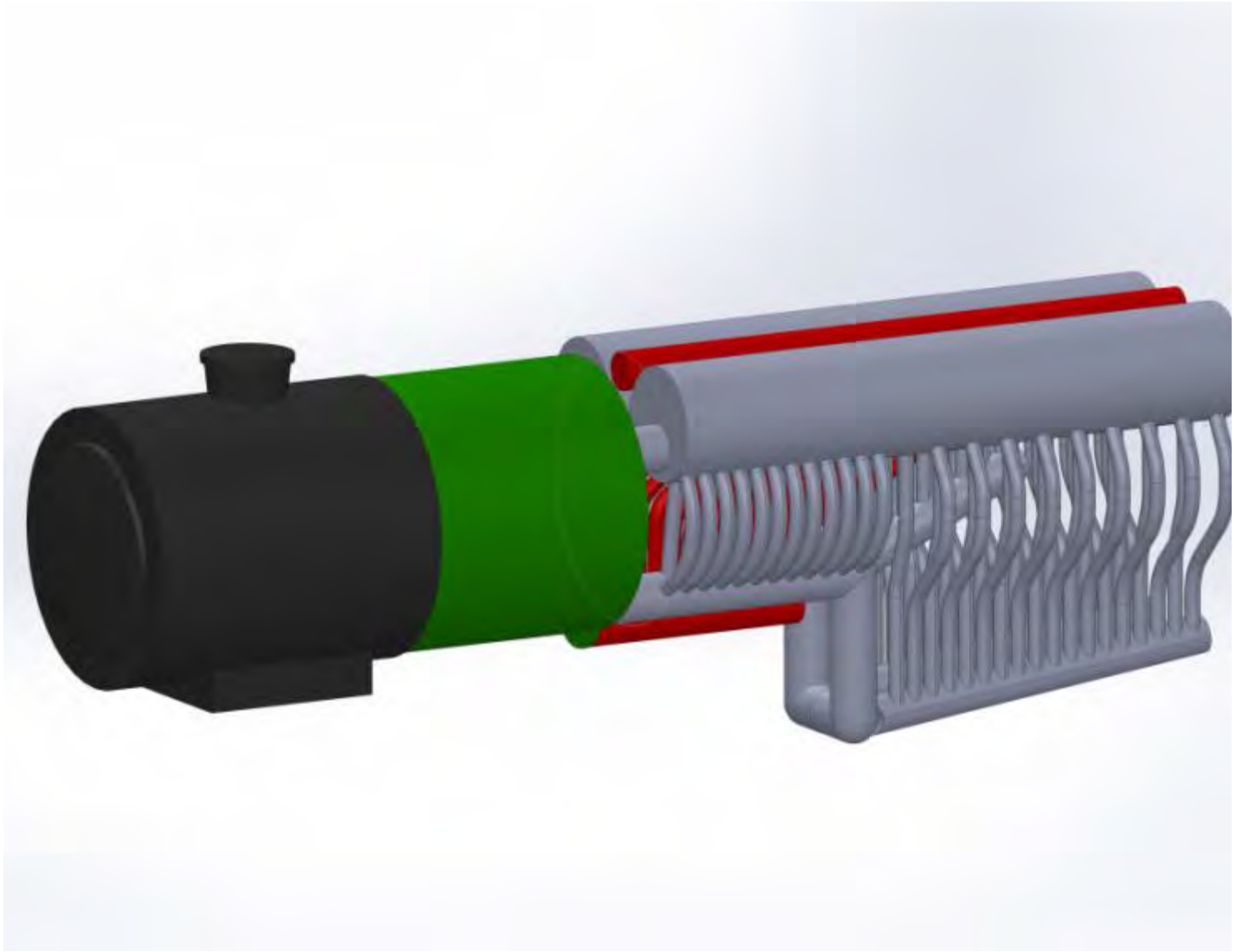

Water Tube Firebox

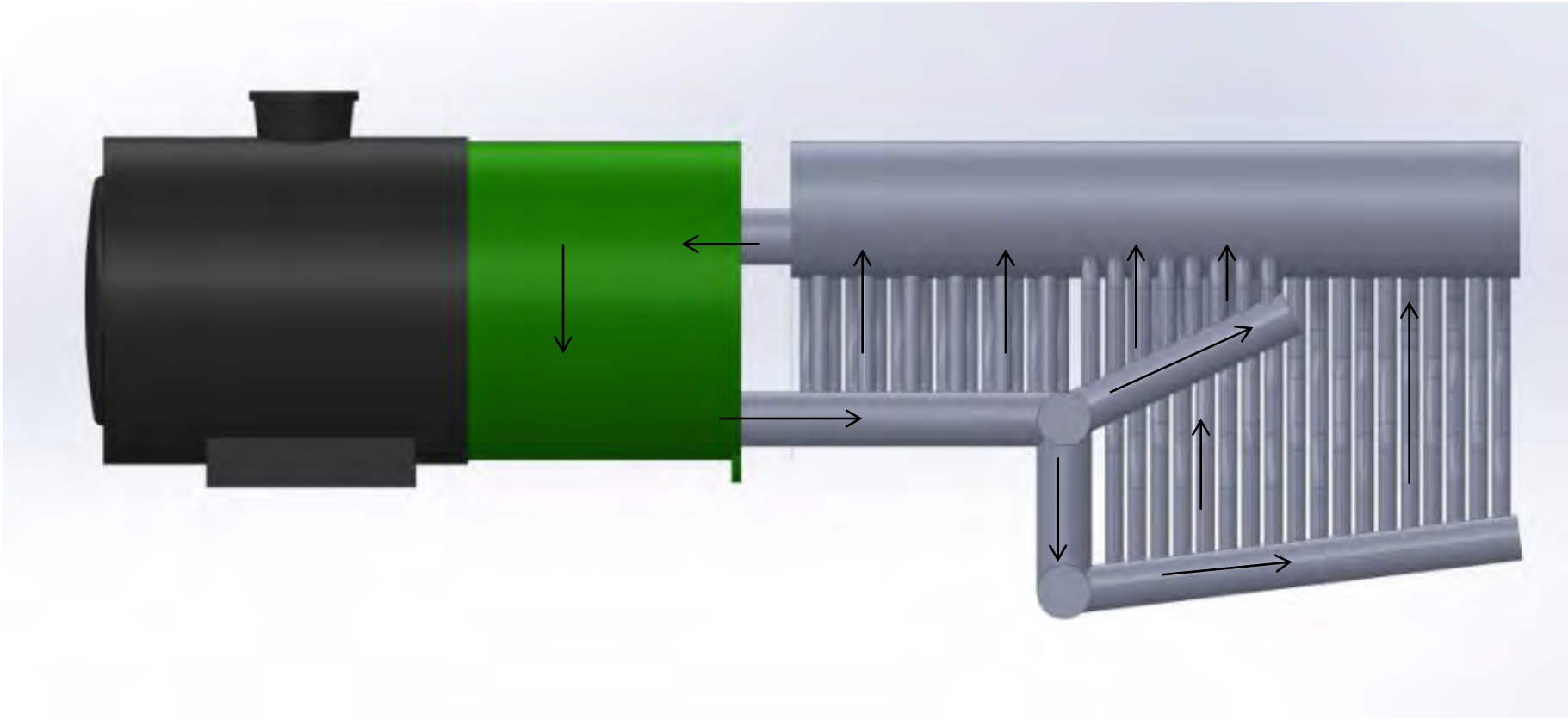

Water Tube Firebox – Half

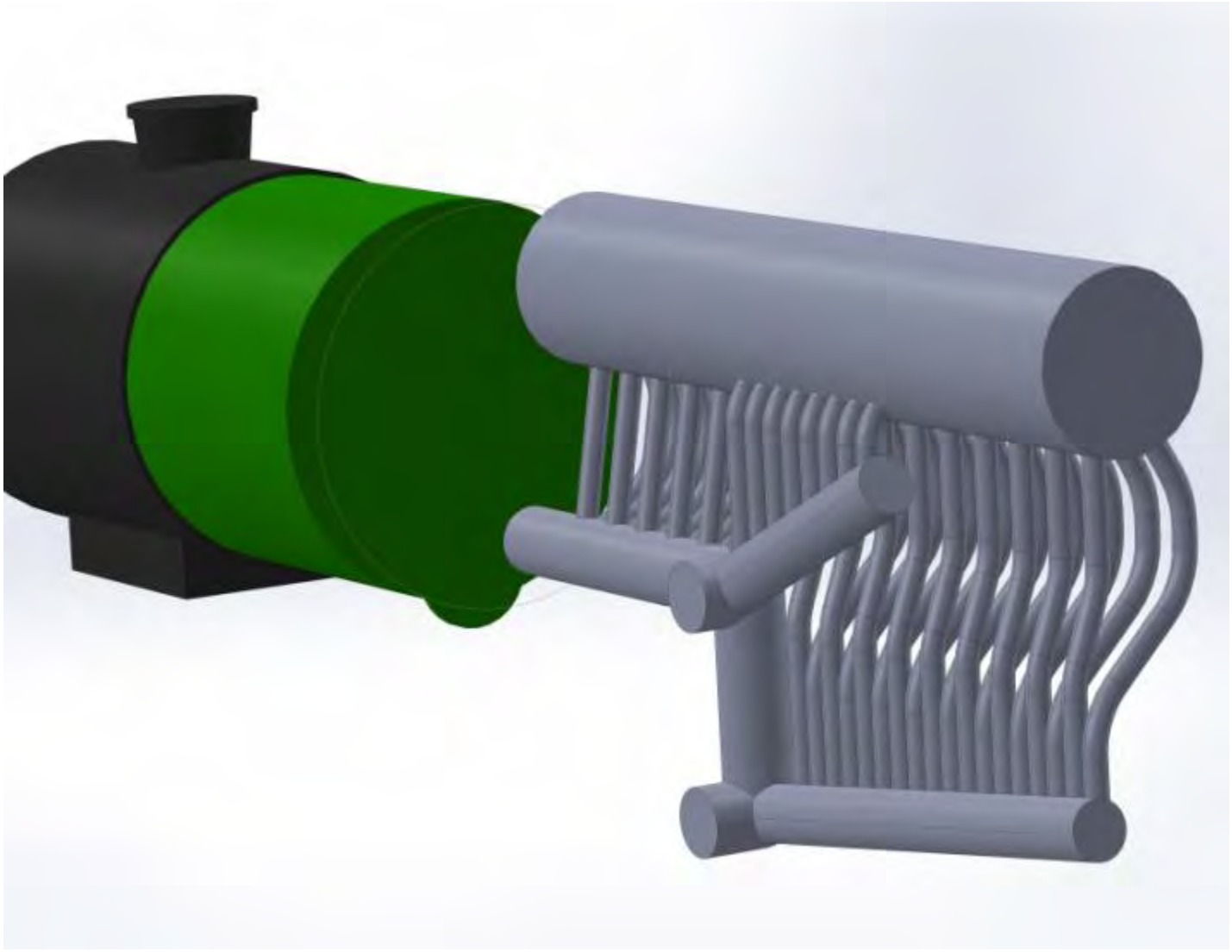

Radiant Superheater

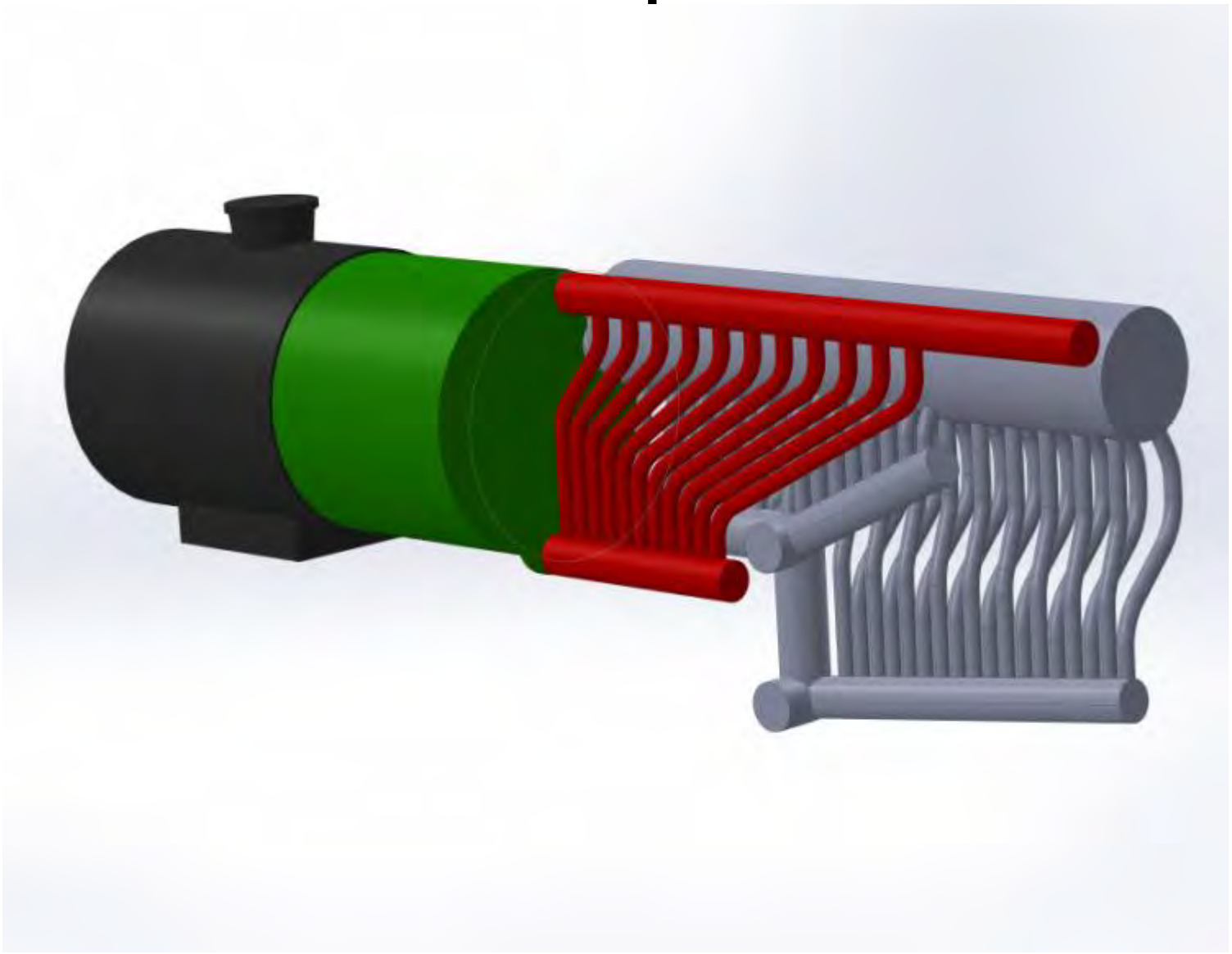

Boiler Details

- Modular Construction
- Firebox made in halves
- External cast firebrick cladding
- Modular Superheater
- “Dry side” Regulator
  - Superheated steam auxiliaries
- Interchangeable with normal boiler.

Running Gear

- Horn Guides
- Spring Failures
- Sliding Surfaces and Bearings
  - Dirt ingress
  - Lubrication
- Frame
  - Indirect / Complex Load Paths
  - Frame Cracking

Coupling Rod Loads (12”:1 ft)

- For an 2438 mm (8ft) wheelbase:
  - A 25 mm dipped rail joint increases rod centres by 0.128 mm
  - Manufacturing tolerances up to 0.25 mm
  - An increase in the frame temperature by 50°C increases rod centres by 1.34 mm
  - Equivalent to a stress of 144 N/mm² as rod passes dead centre.(645 kN!!**)
- Source of frame cracking
- Overload of bearings

Load Paths

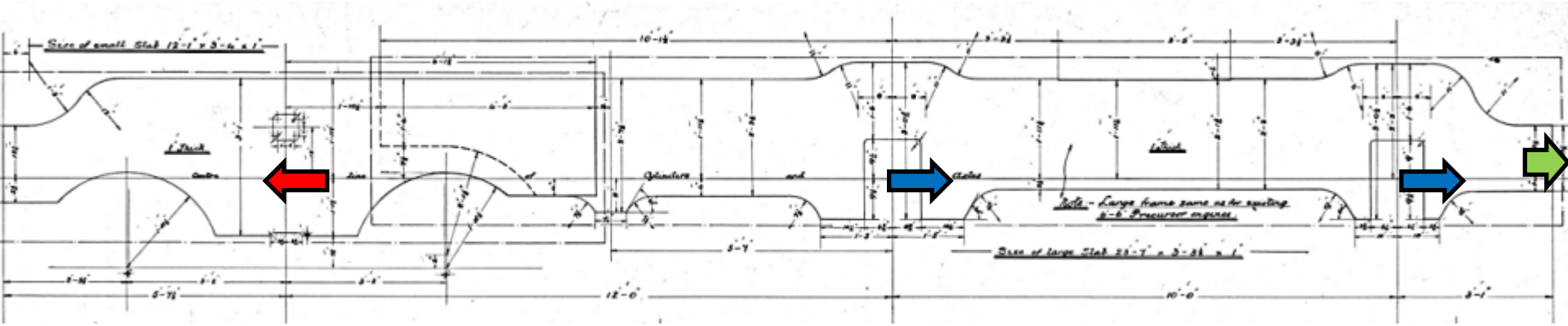

Loads on Frames

- Complex, cyclic, difficult to model
  - Piston thrust (20t)
  - Coupling rod forces (20t+?)
  - Slidebar vertical reaction (5t)
  - Suspension forces – static and track - twist
  - Weight of mounted equipment
  - Drawbar / couplers / buffers (200t)
  - Dynamic forces – reciprocating/rotating imbalance

“Revolution” Running Gear

- Separate the principle loads
- React them in the most efficient way
- Locate axles – new method
- Compensated springing
- Accuracy at the component level
- Sealed / non sliding bearing surfaces
- Roller bearings

Rubber!



Elastomeric Suspension

- Well established in Mainline and Underground
- Springs:
  - Soft in shear
  - Stiff in compression
- Single spring element – many properties
- No rubbing surfaces
- Noise attenuation
- Many different grades to cope with heat, oil, creep etc.
- Make from stock material – cheap
- Damping properties

Axle

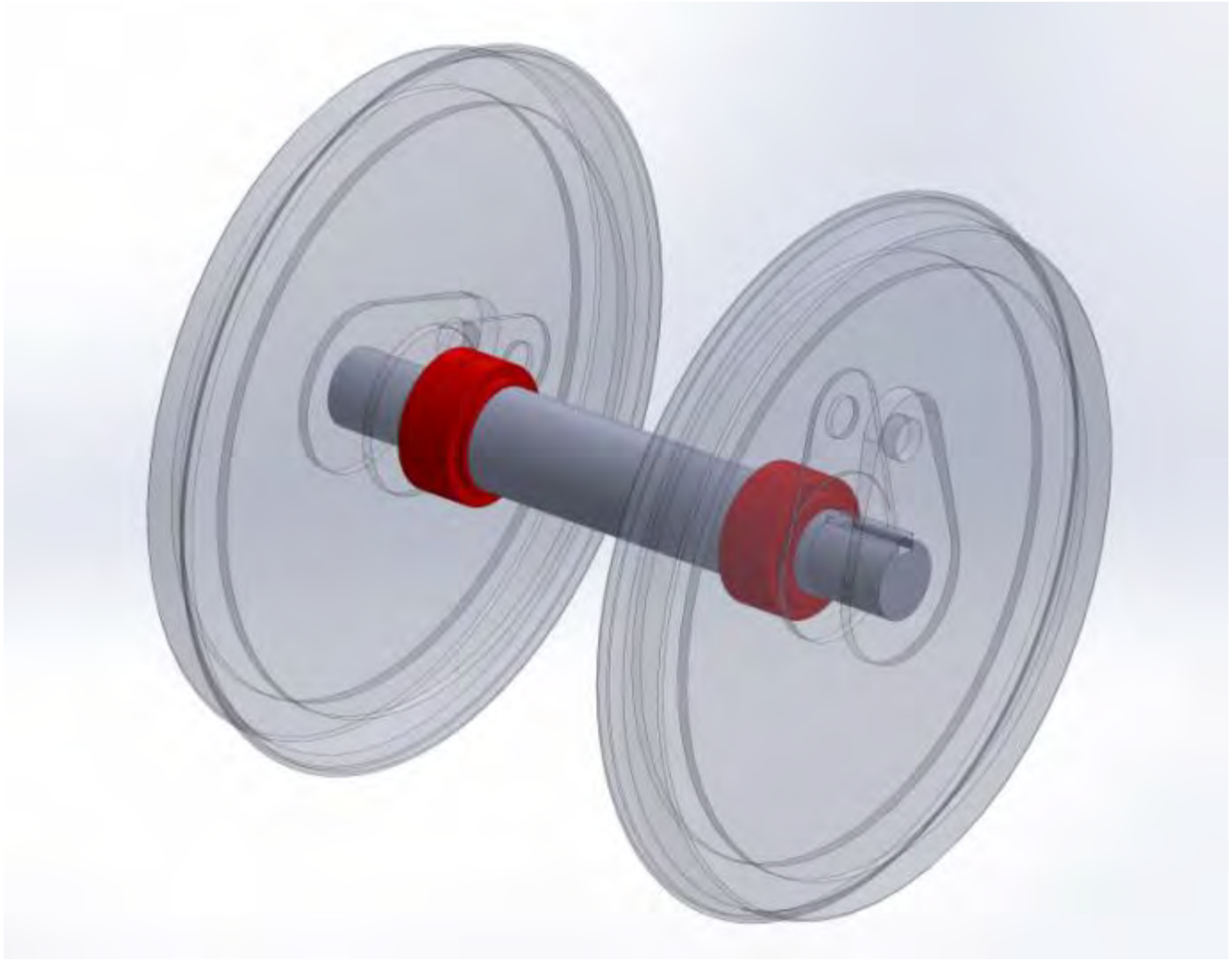

Spring Element

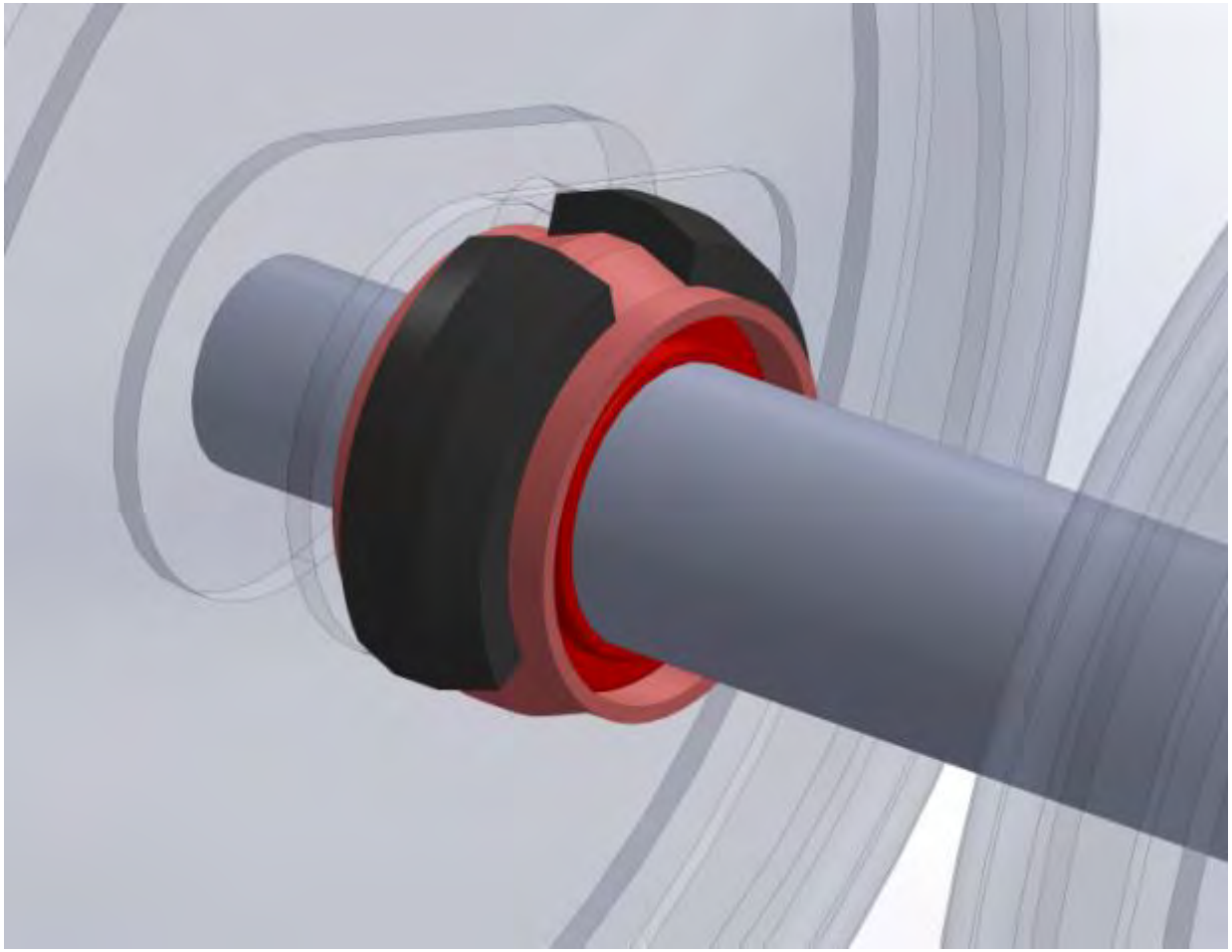

Spring Housing

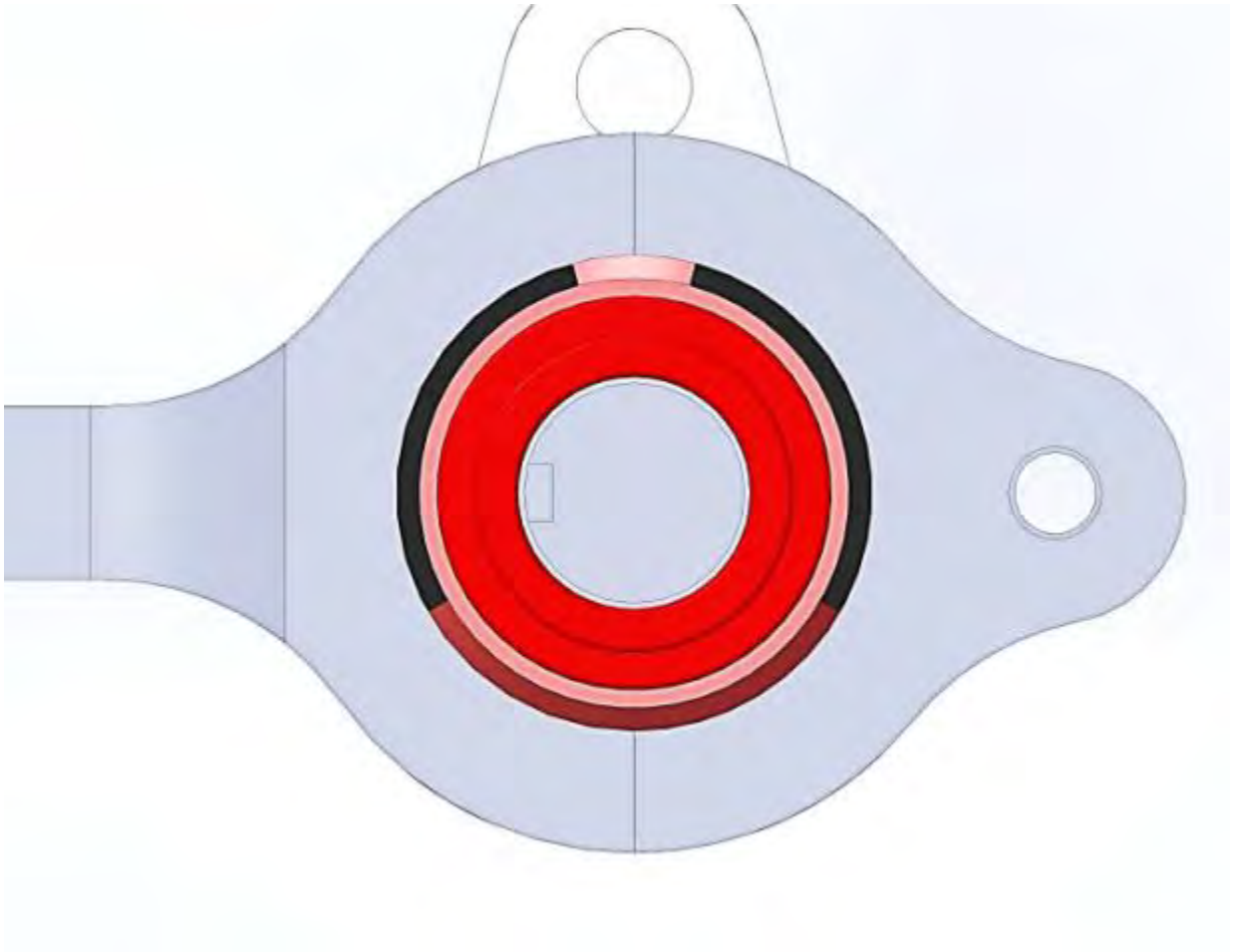

Axlebox Section

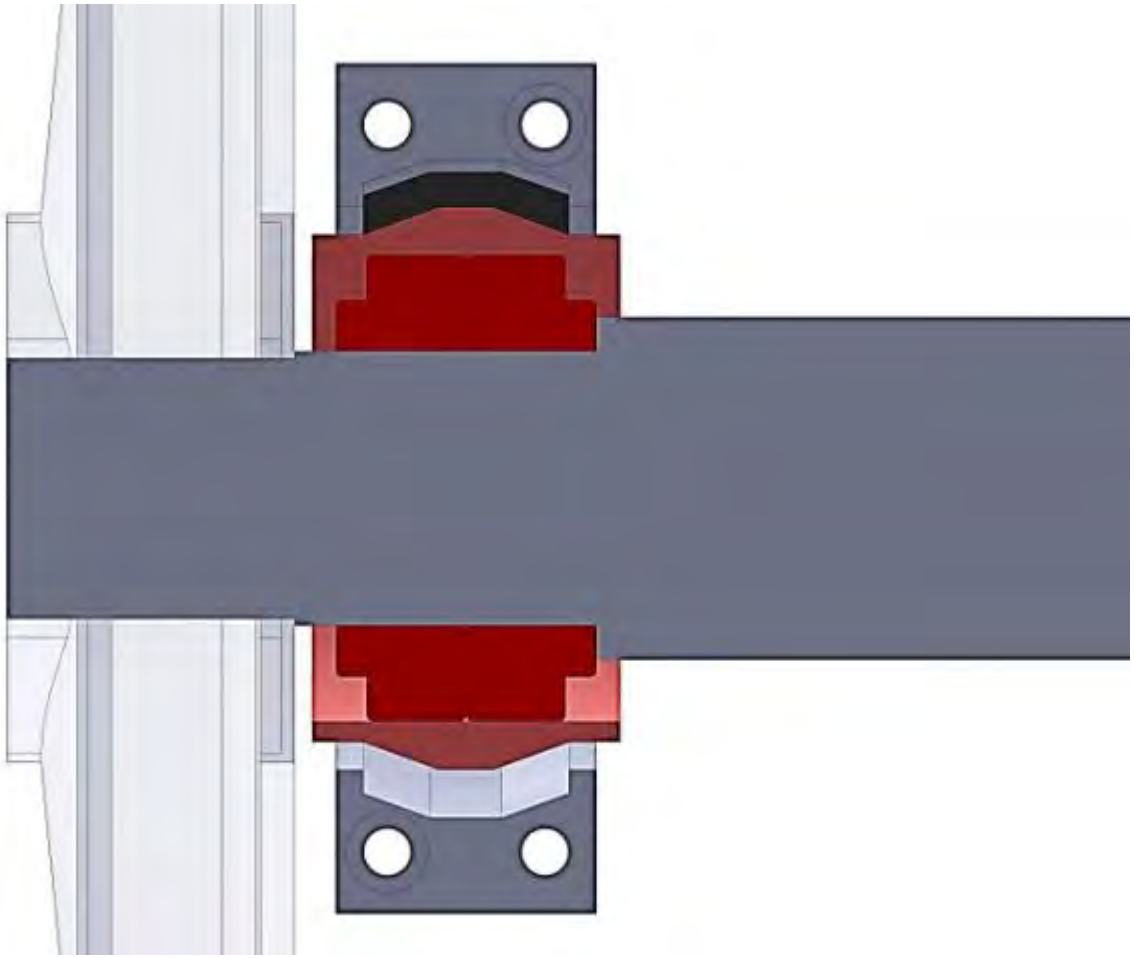

Wheelset

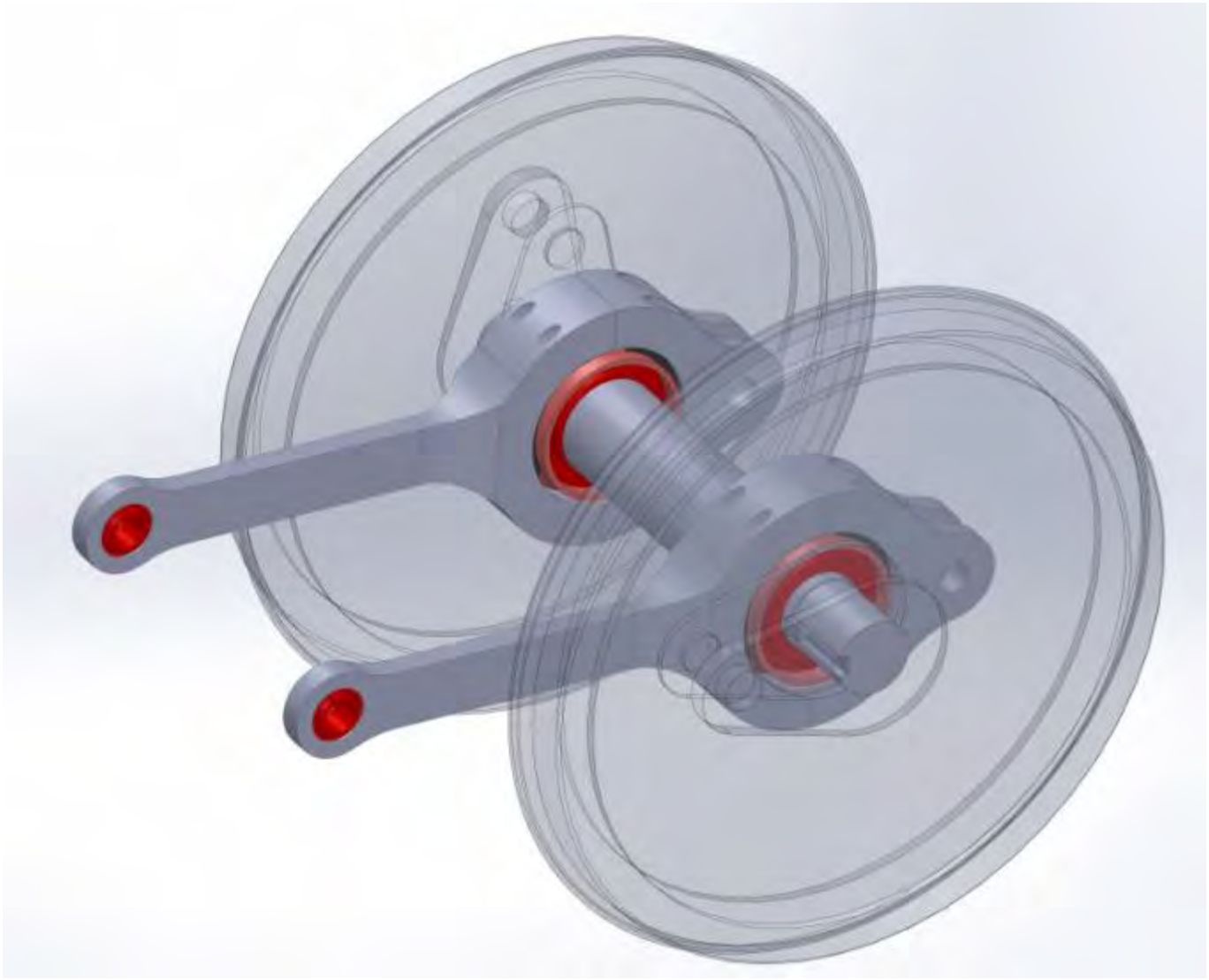

Wheelsets x 3

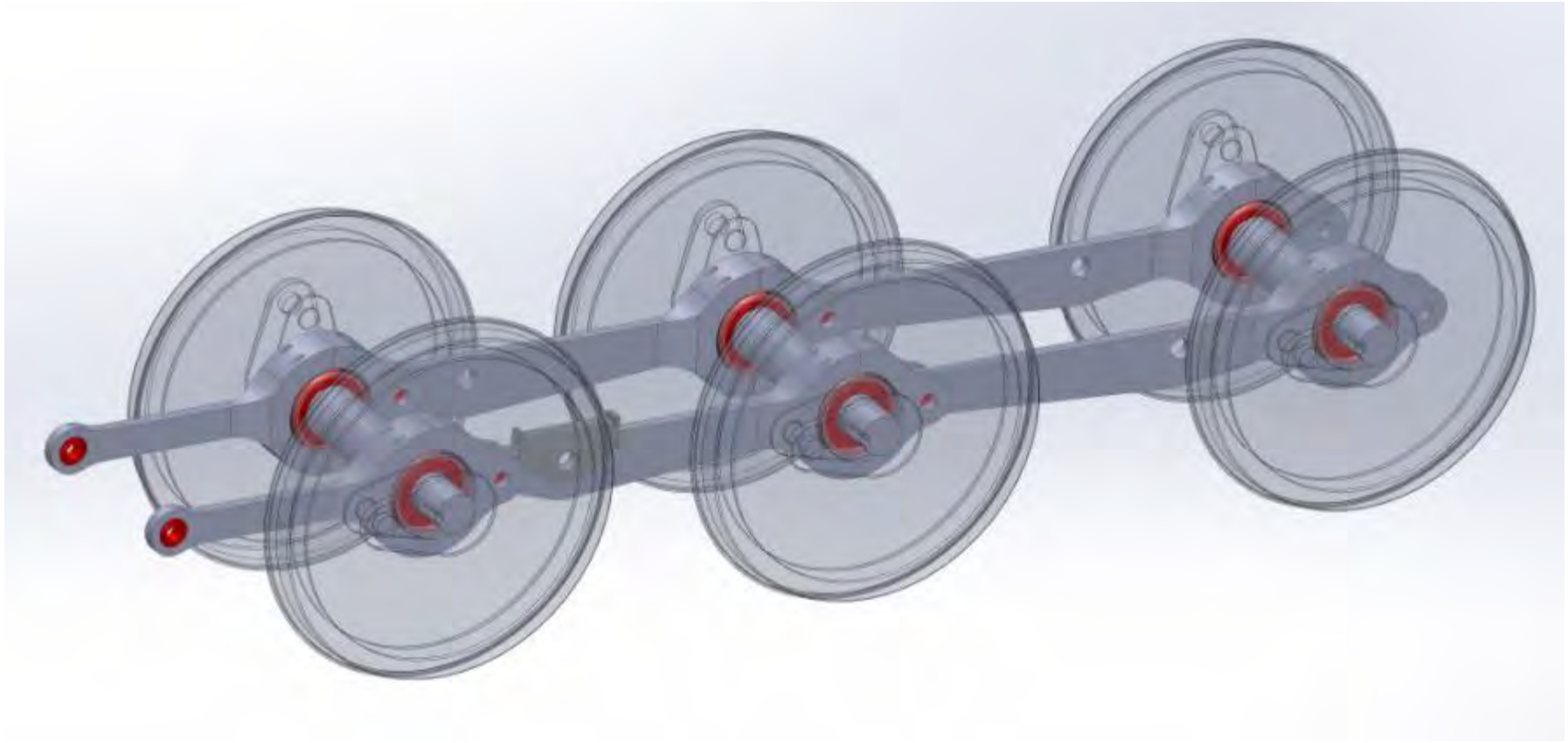

Axle Location

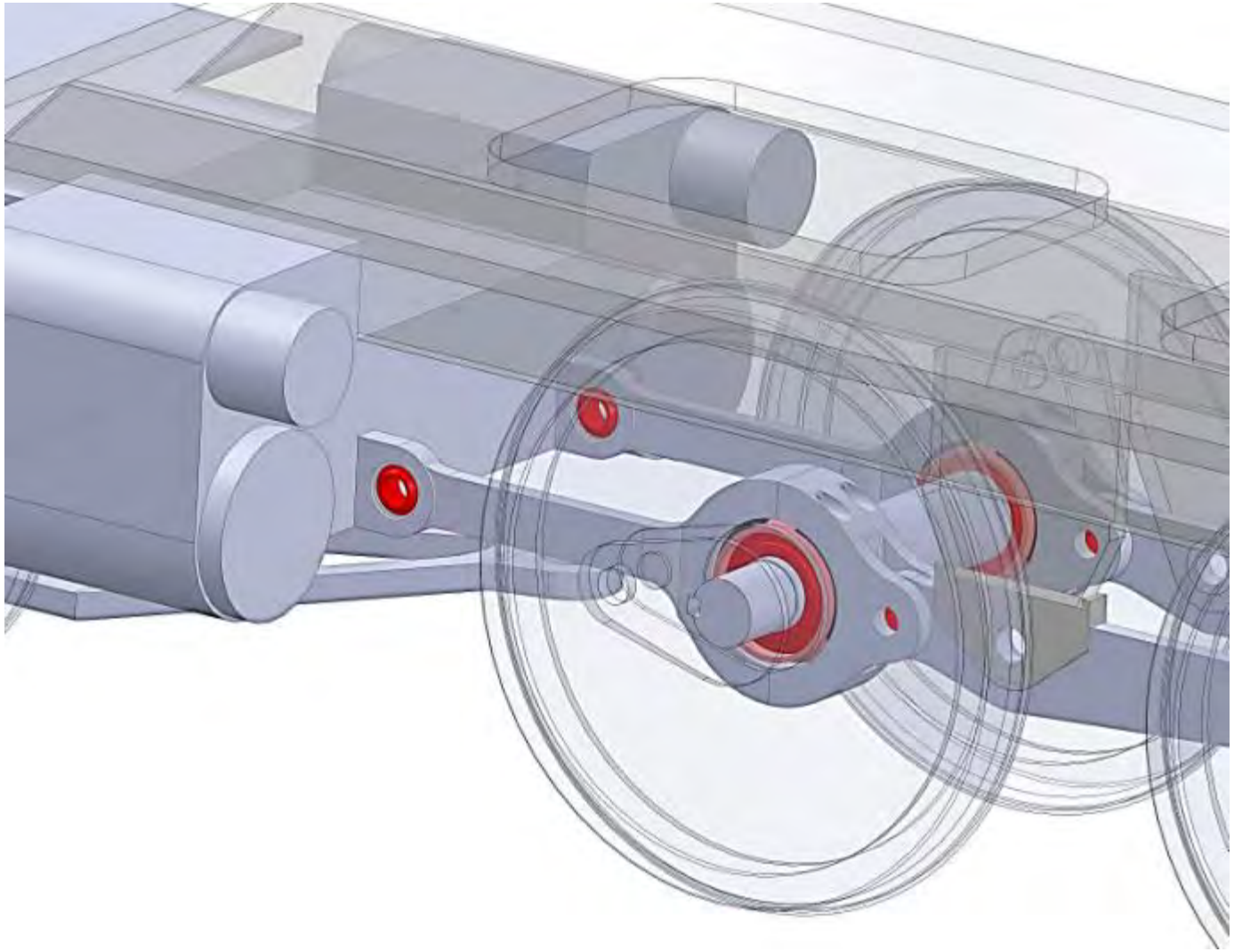

Axle Location Summary

- Axles mounted on Radius Arms
- Direct load path to Monoblock Cylinder
- Elastic element between Axles and Radius Arms
  - Accomodates differences in axle / rod centres
  - Track irregularities
  - Primary suspension = low unsprung mass
- Precision at the component level

Secondary Suspension

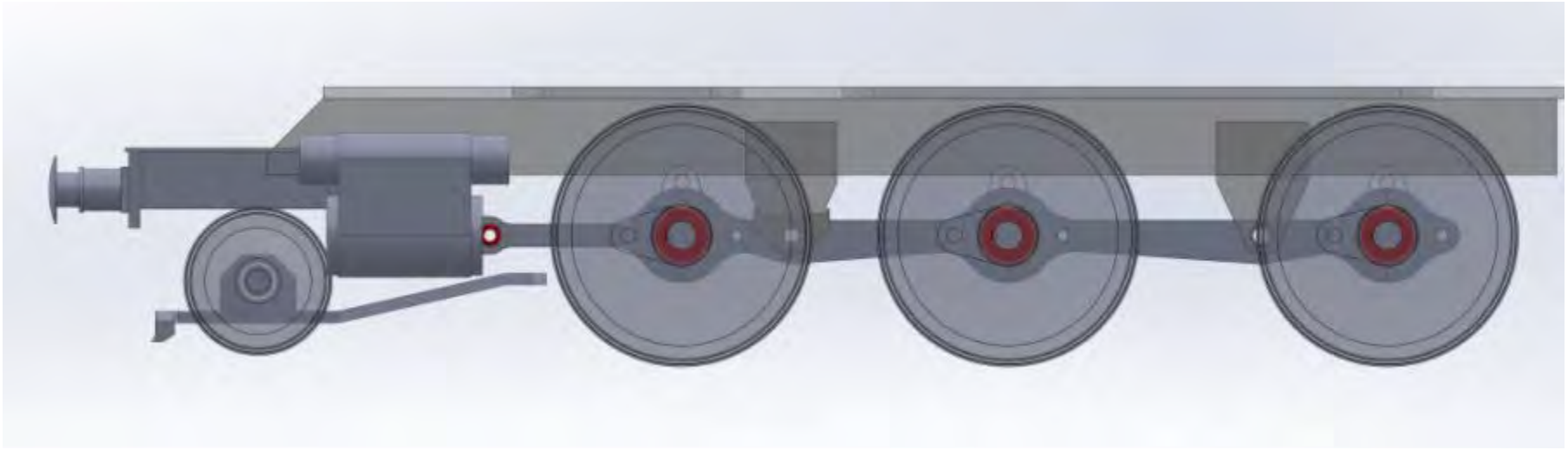

Deltic Bogie

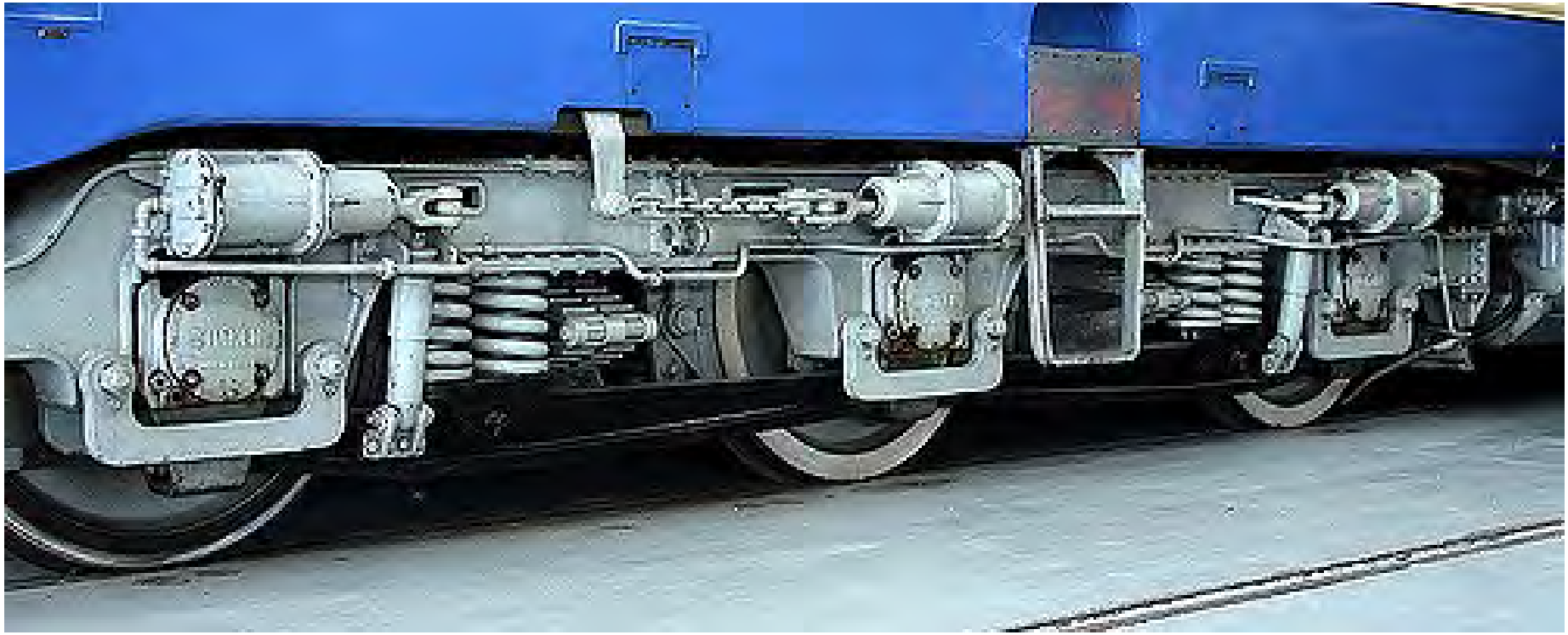

Secondary Suspension

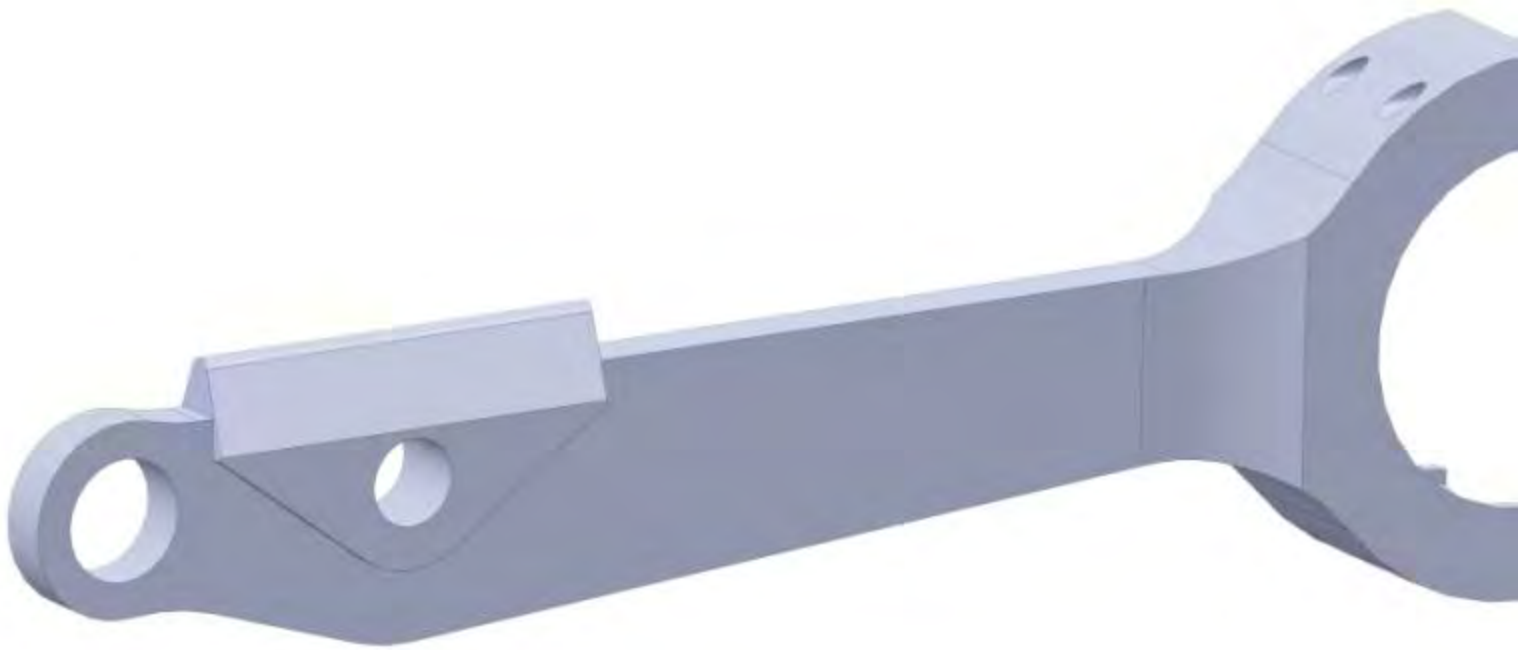

Secondary Suspension

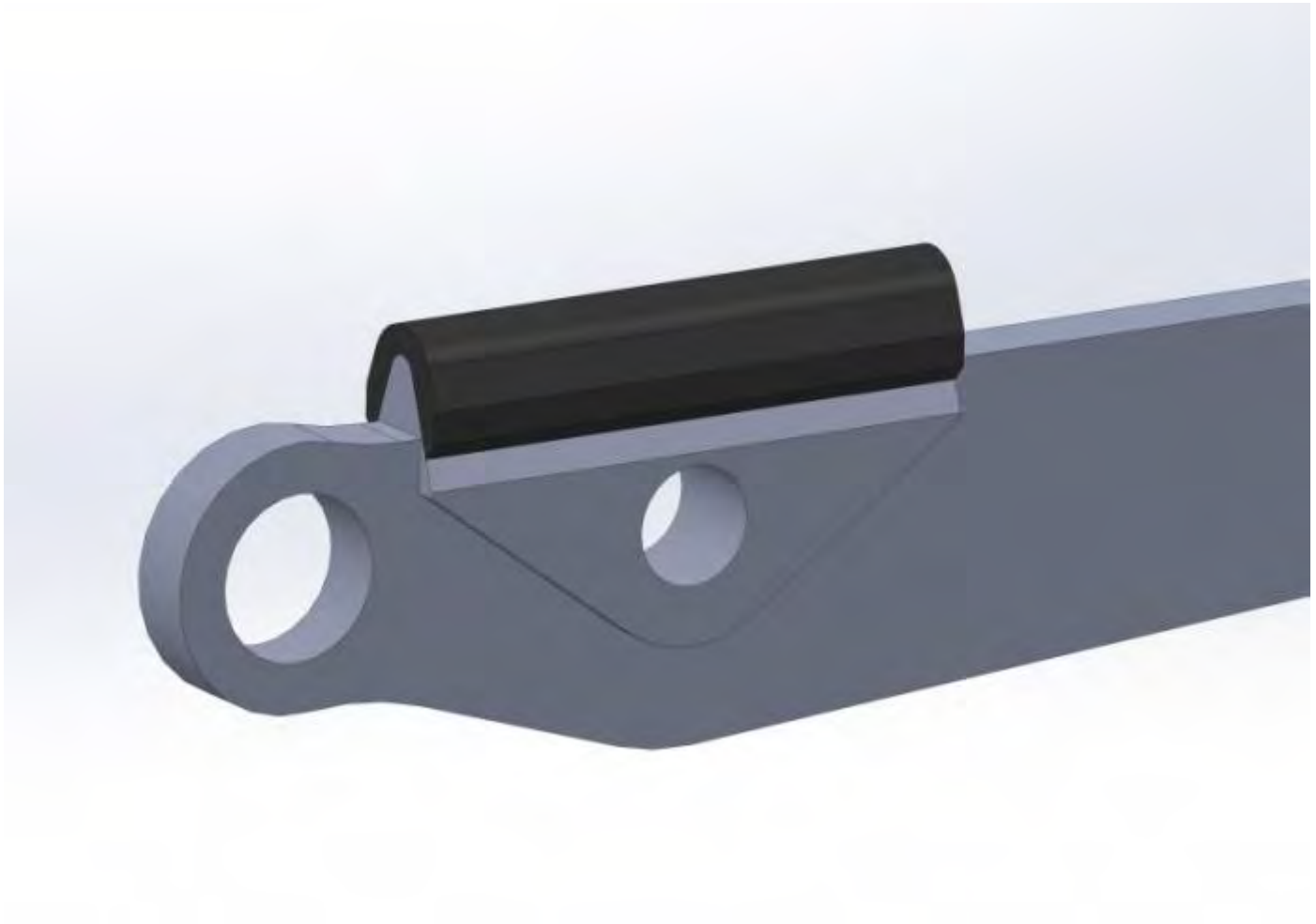

Secondary Suspension

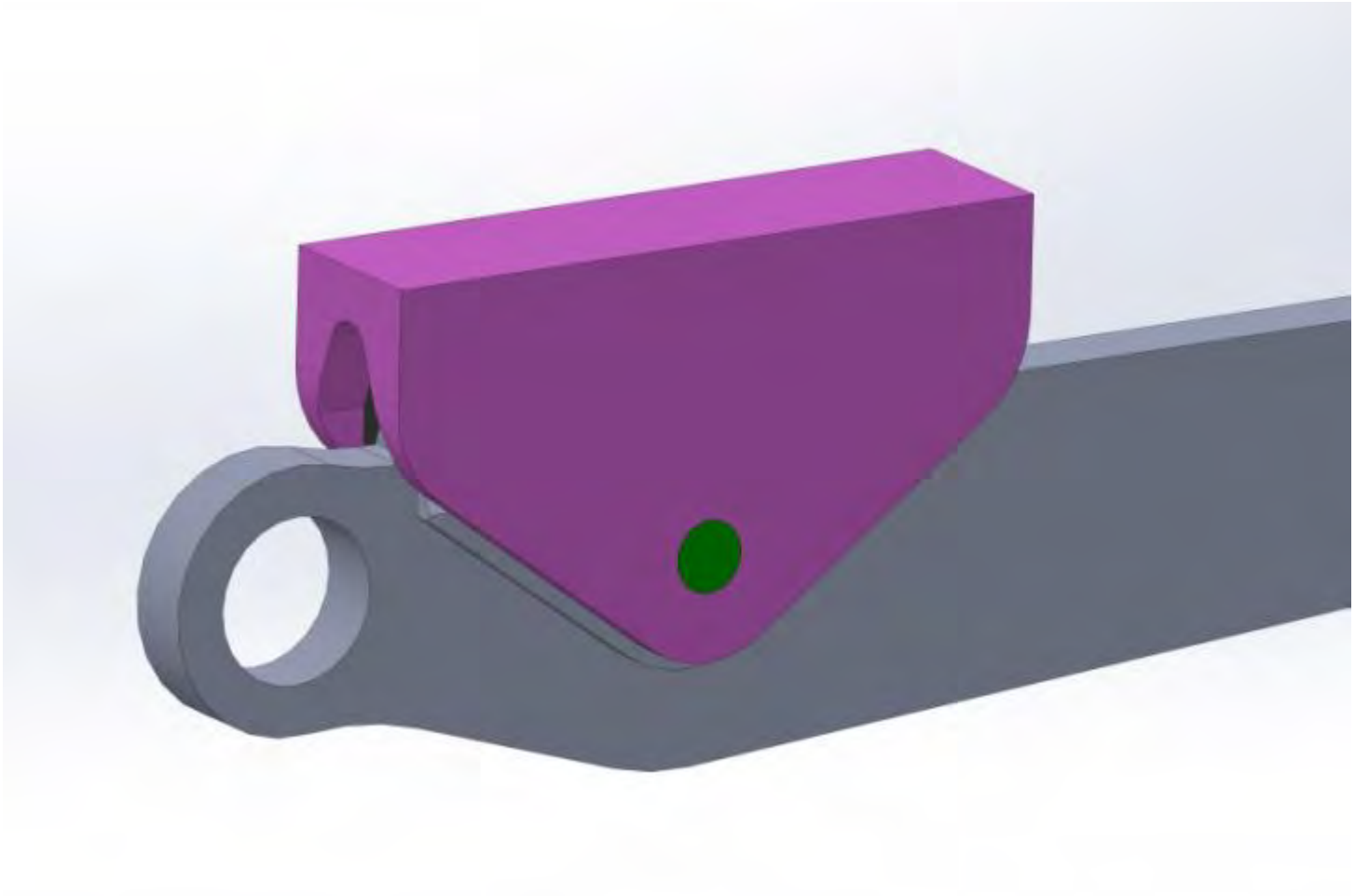

Secondary Suspension

Lateral – Compression: Very Stiff

Vertical – Comp+Shear: Fairly stiff. Some load transfer

Longitudinal – Shear: Soft. Traction loads through radius arms only

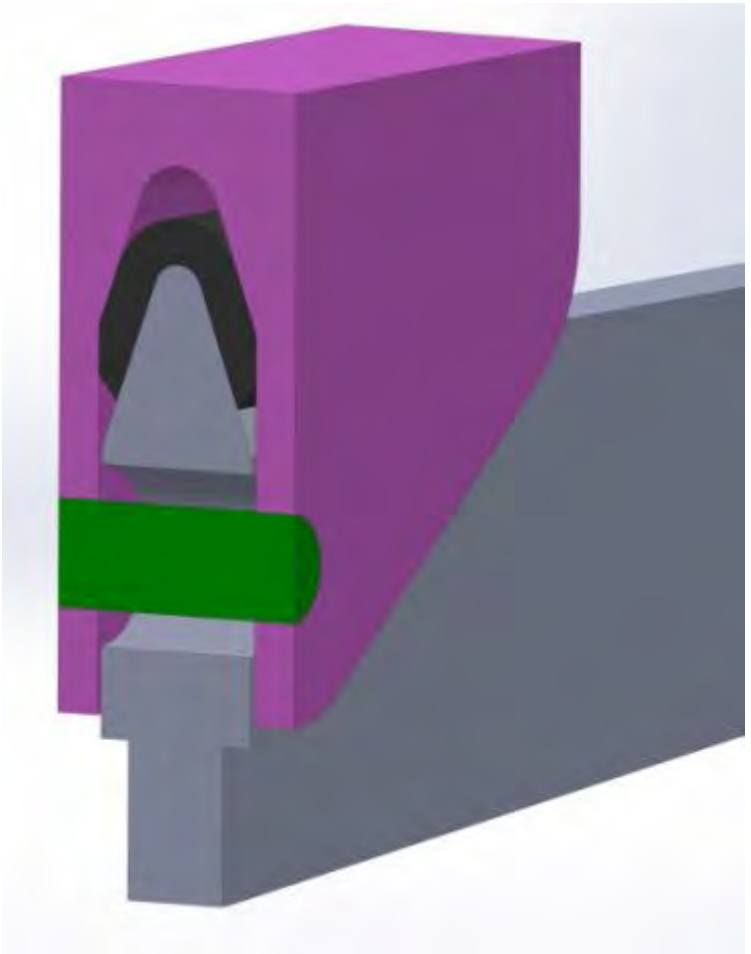

Main Frame

- Functions
  - Support Equipment – Boiler, Valve gear etc.
  - Suspension location
  - Drawbar Loads
- Forces are much simpler and easily defined.
  - Easier to design
  - Lower risk of cracking

Main Frame

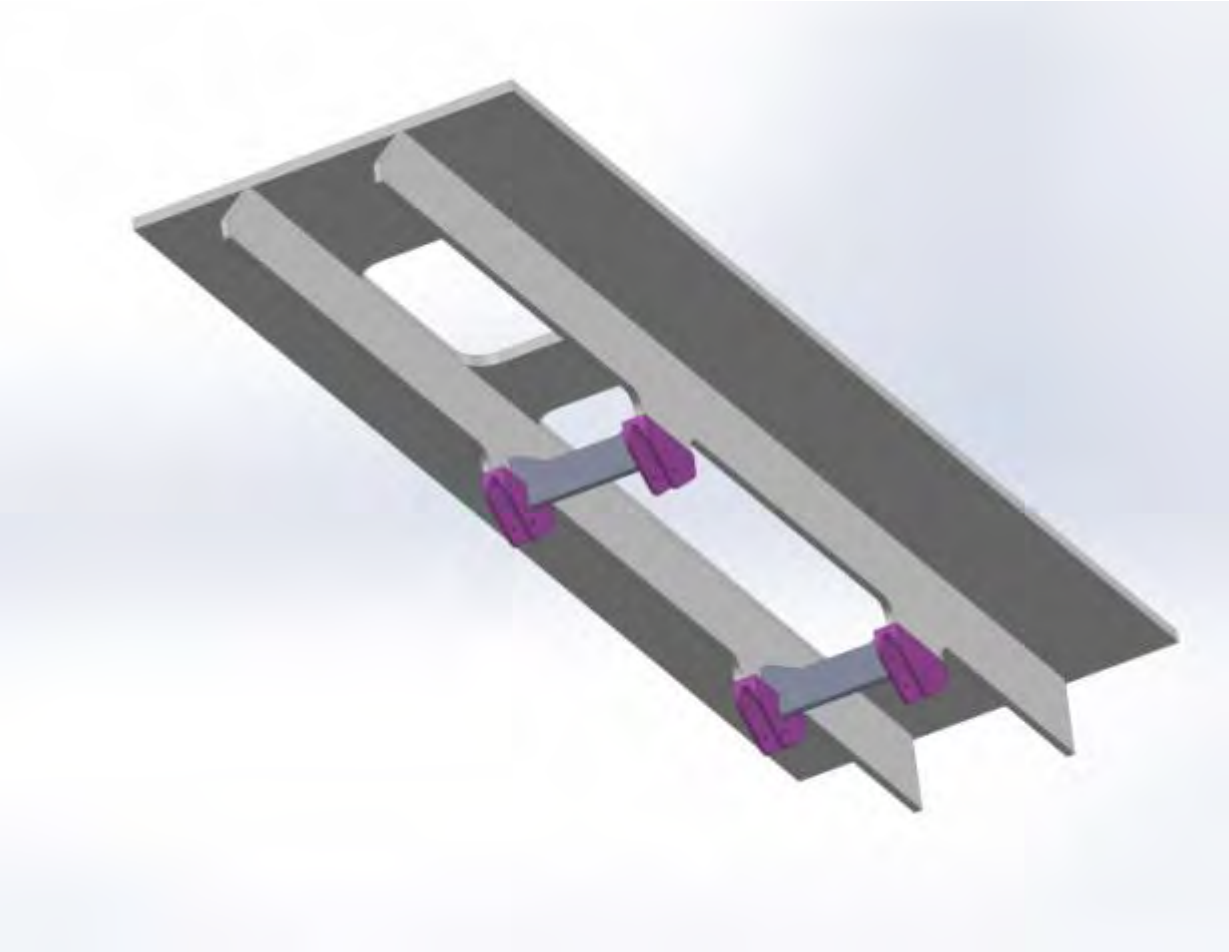

What Else?

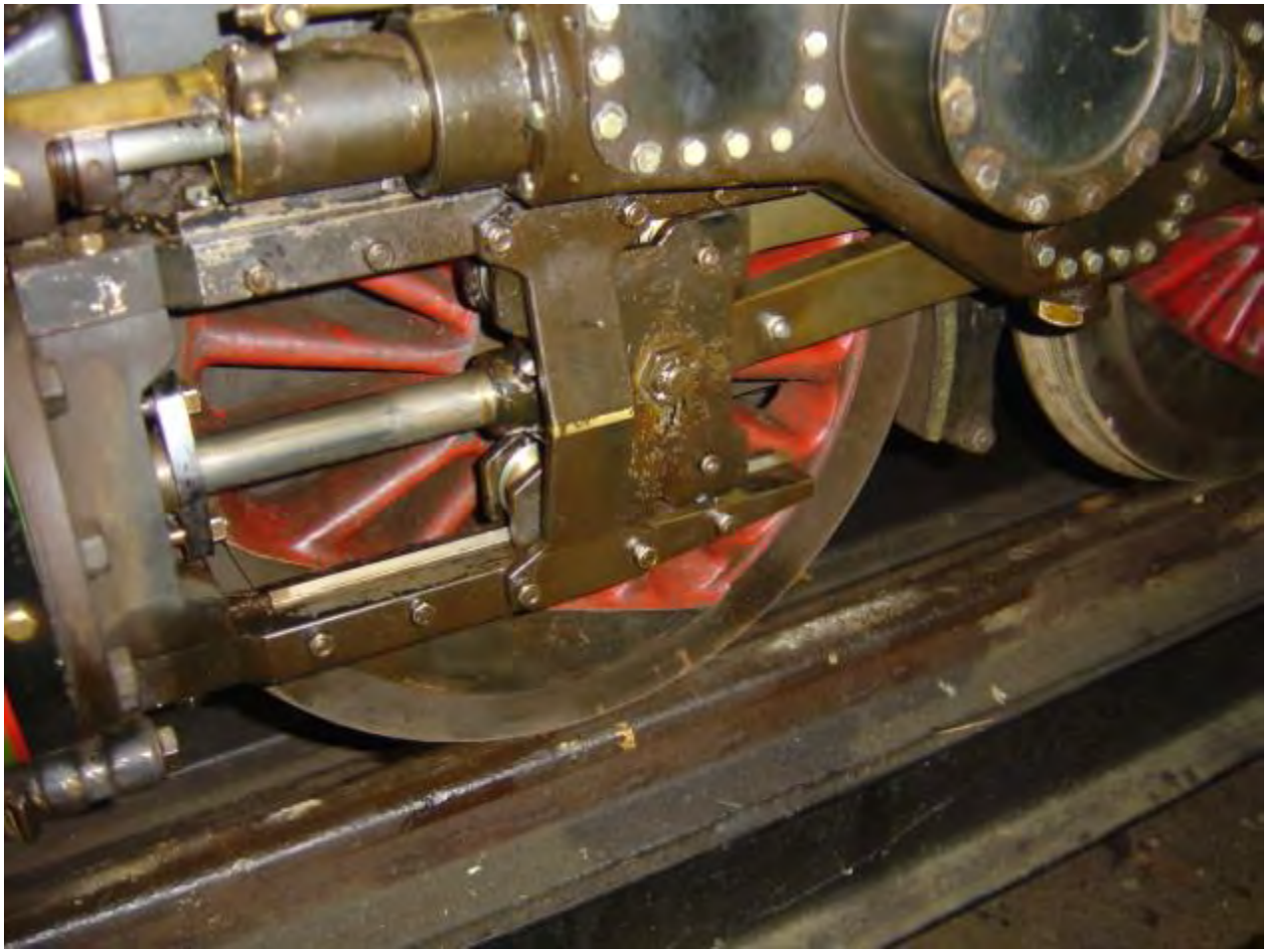

Roller Cross Head

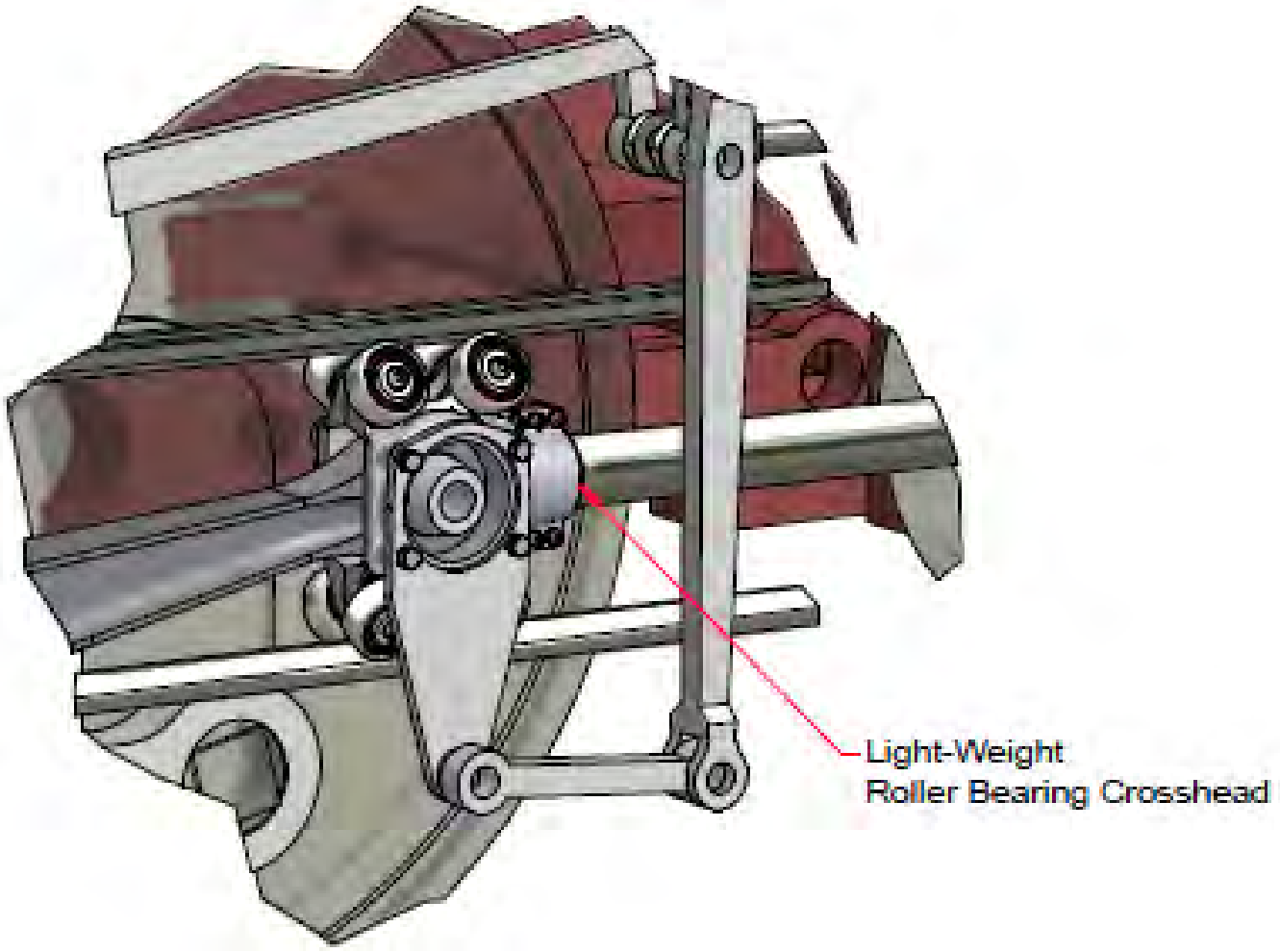

Twining Valve Gear – KLR “Sian”



Roller Expansion Link



Disc Brakes

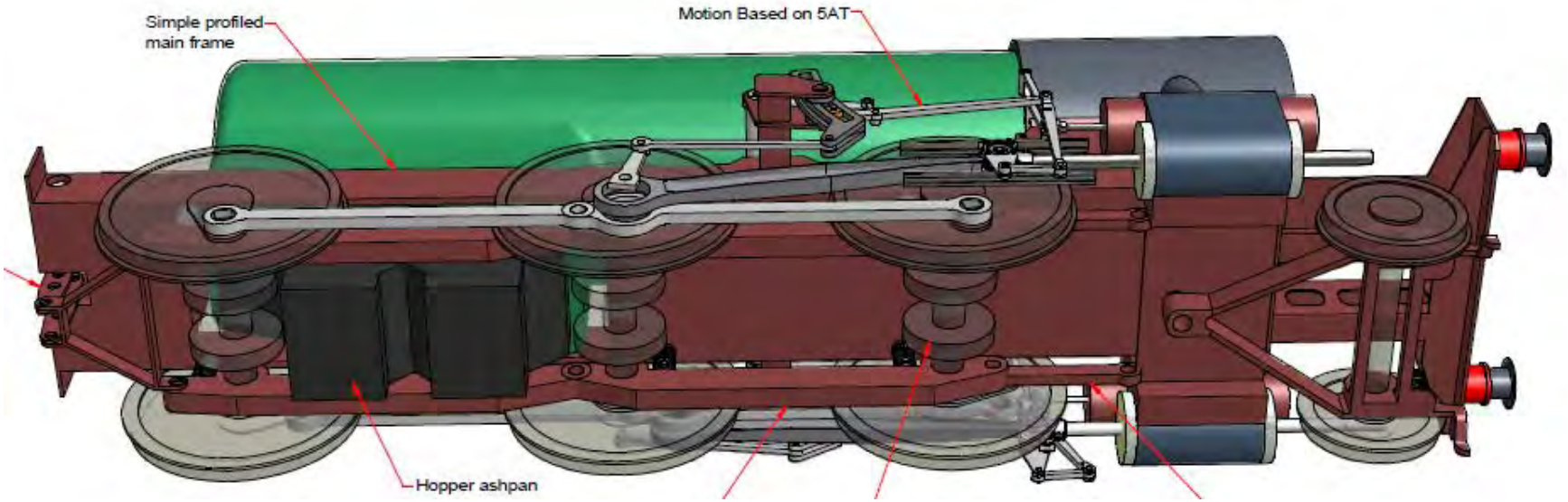

- Reduce heat build up in tyre
- Use “Off the shelf” air braking equipment
- No wheel tread conditioning

Fabricated Cylinders

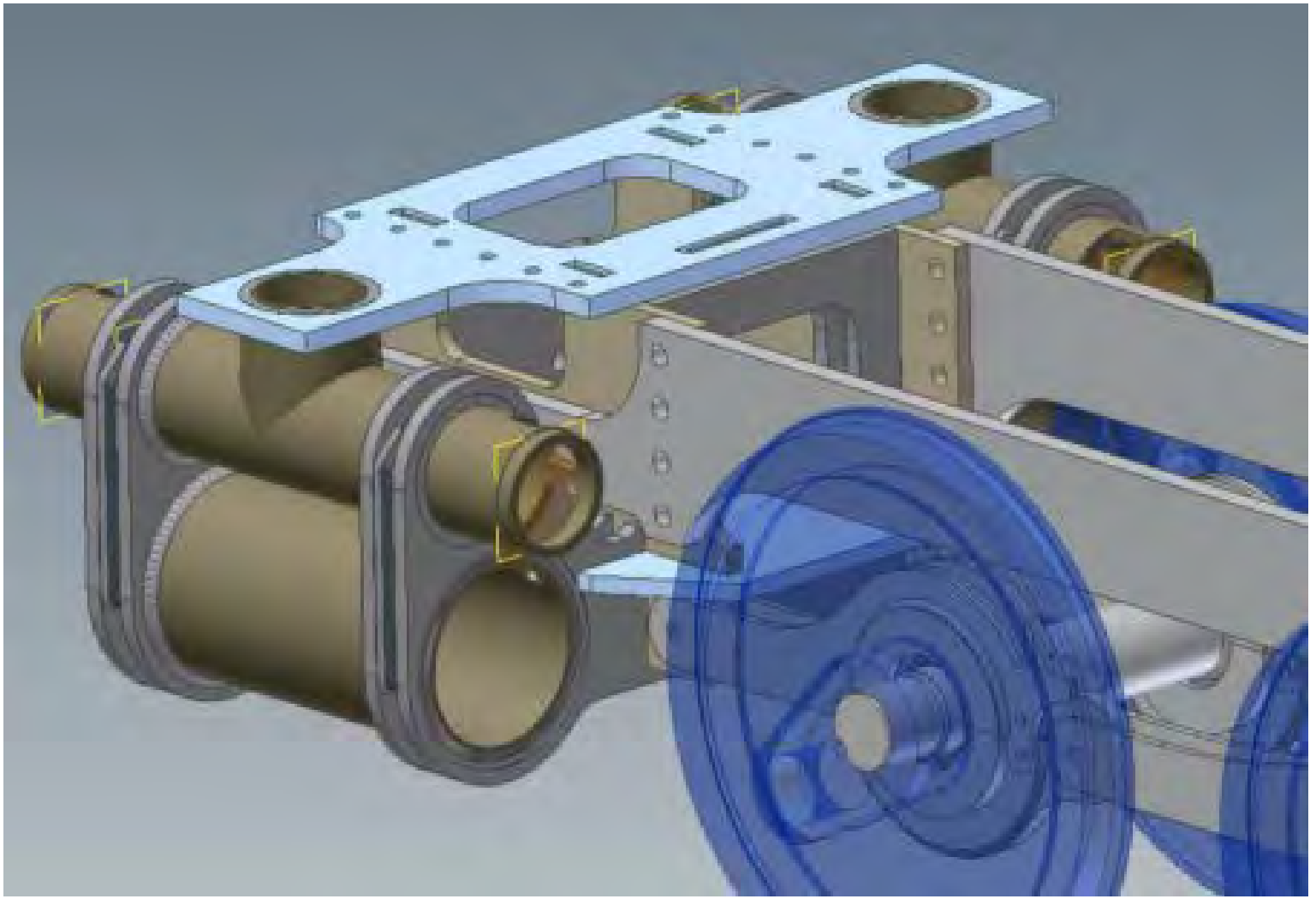

Moving Forward

- Project in early stages
- Three AST members
- Some preliminary concept work done
- Small amount of start up funding
- Who else can help?
  - Time
  - Money

An AST Project?

- Get Student Members involved
- Showcase “Modern Steam” Technology
- Trial horse for new ideas
- Instrumentation and Testing
  - No permission needed!
- Spread the cost and manpower
- Stepping stone to the Real Thing?

Thanks For Listening

